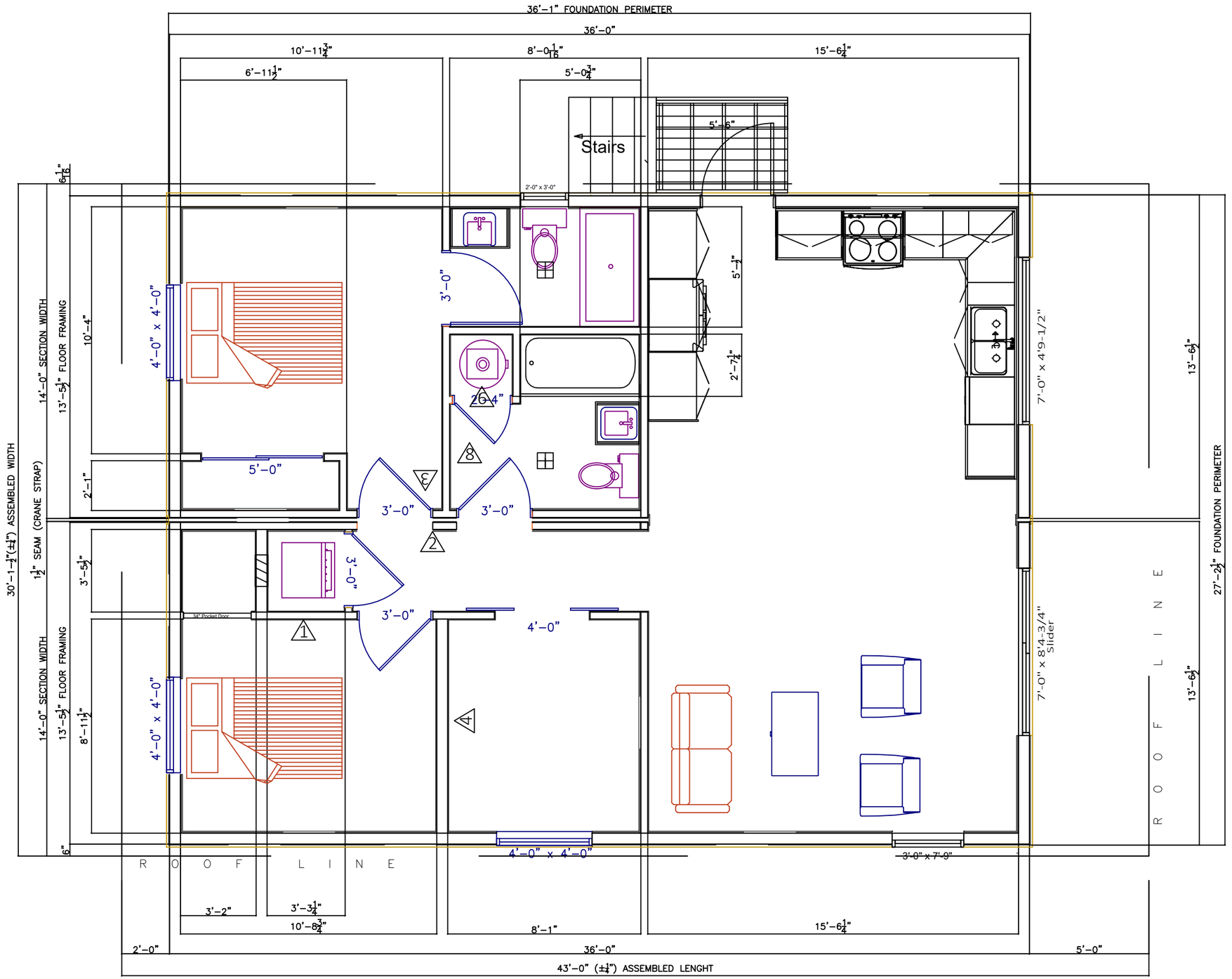

CLICK MODULAR HOMES

604–884–5122
WWW.CLICKMODULAR.COM

THIS DRAWING MUST NOT BE SCALED.
THE GENERAL CONTRACTOR SHALL VERIFY ALL DIMENSIONS, DATUMS, AND ELEVATIONS PRIOR TO COMMENCEMENT OF WORK.
ANY ERRORS OR OMISSIONS SHALL BE REPORTED AT ONCE TO THE DESIGNER.

TITLE: DAVIS FLOOR PLAN
DATE: 2 12:10:25
DRAWING BY: Rommel Divinagracia

ALL CONSTRUCTION AND MATERIALS SHALL COMPLY WITH THE LATEST EDITION OF LOCAL BUILDING CODE AND BY–LAWS

PUBLIC REFERENCE COPY / OWNER DETAILS REMOVED

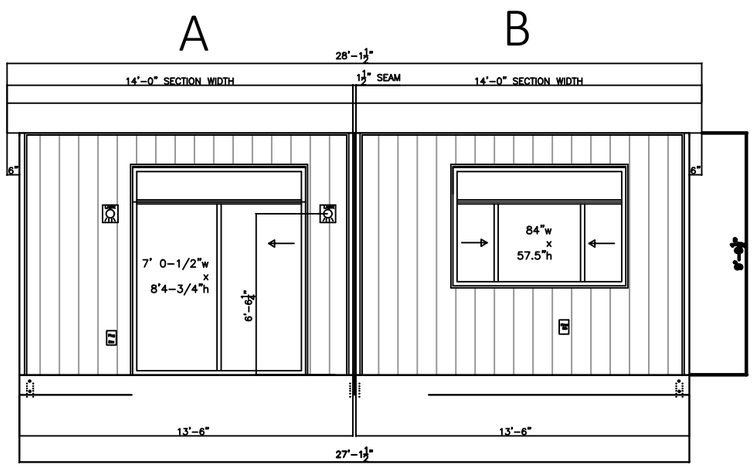

Front Elevation

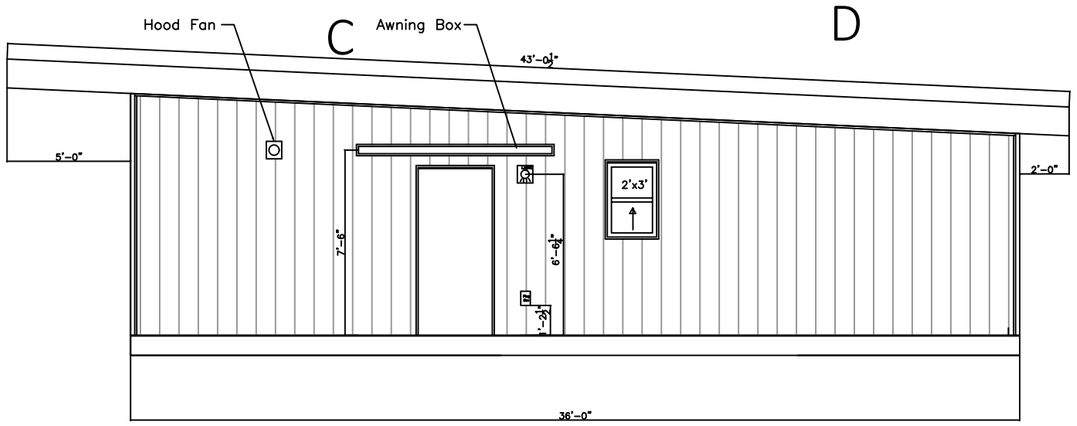

Left Side Elevation

CLICK MODULAR HOMES
604-884-5122
WWW.CLICKMODULAR.COM

THIS DRAWING MUST NOT BE SCALED.
THE GENERAL CONTRACTOR SHALL VERIFY ALL DIMENSIONS, DATUMS, AND ELEVATIONS PRIOR TO COMMENCEMENT OF WORK.
ANY ERRORS OR OMISSIONS SHALL BE REPORTED AT ONCE TO THE DESIGNER.

TITLE: DAVIS FLOOR PLAN
DATE: 7 14:50:00
DRAWING BY: Rommel Divinagracia

ALL CONSTRUCTION AND MATERIALS SHALL COMPLY WITH THE LATEST EDITION OF LOCAL BUILDING CODE AND BY-LAWS

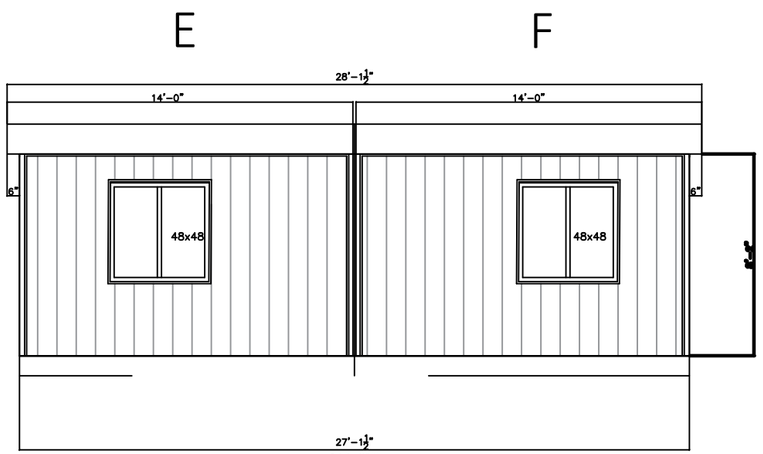

Rear Elevation

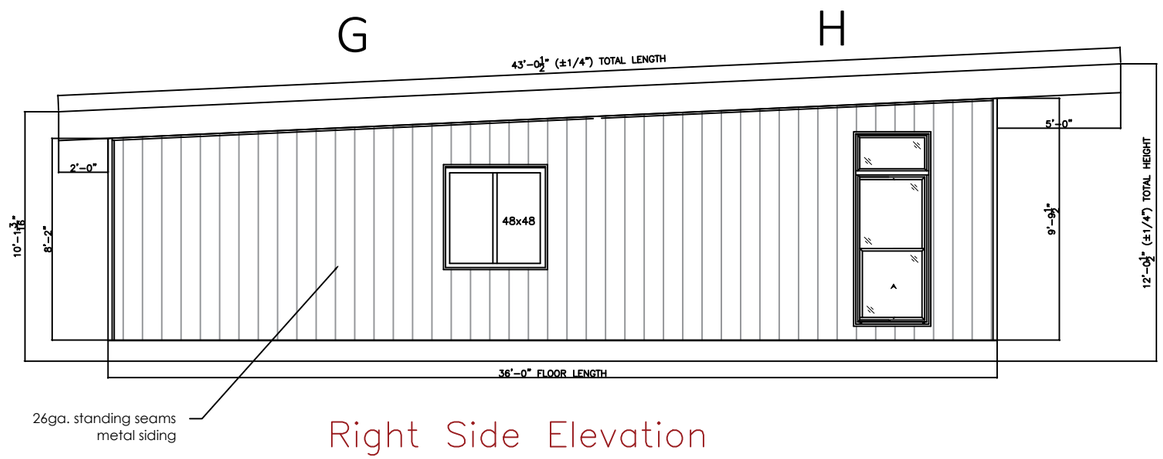

Right Side Elevation

PUBLIC REFERENCE COPY / OWNER DETAILS REMOVED

CLICK MODULAR HOMES
604–884–5122
WWW.CLICKMODULAR.COM

THIS DRAWING MUST NOT BE SCALED.
THE GENERAL CONTRACTOR SHALL VERIFY ALL DIMENSIONS, DATUMS, AND ELEVATIONS PRIOR TO COMMENCEMENT OF WORK.
ANY ERRORS OR OMISSIONS SHALL BE REPORTED AT ONCE TO THE DESIGNER.

TITLE: DAVIS EXTERIOR WALLS - 2OF2
DATE: 7 14:50:25
DRAWING BY: Rommel Divinagracia

ALL CONSTRUCTION AND MATERIALS SHALL COMPLY WITH THE LATEST EDITION OF LOCAL BUILDING CODE AND BY–LAWS

A

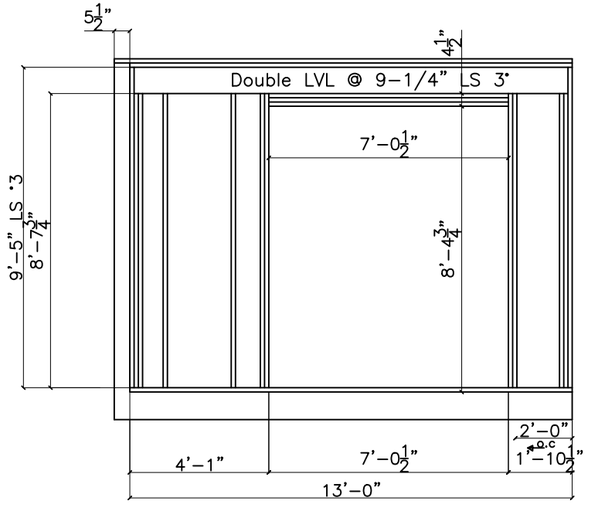

B

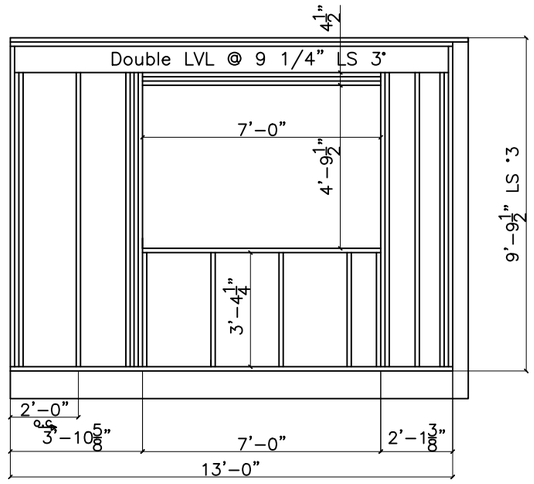

C

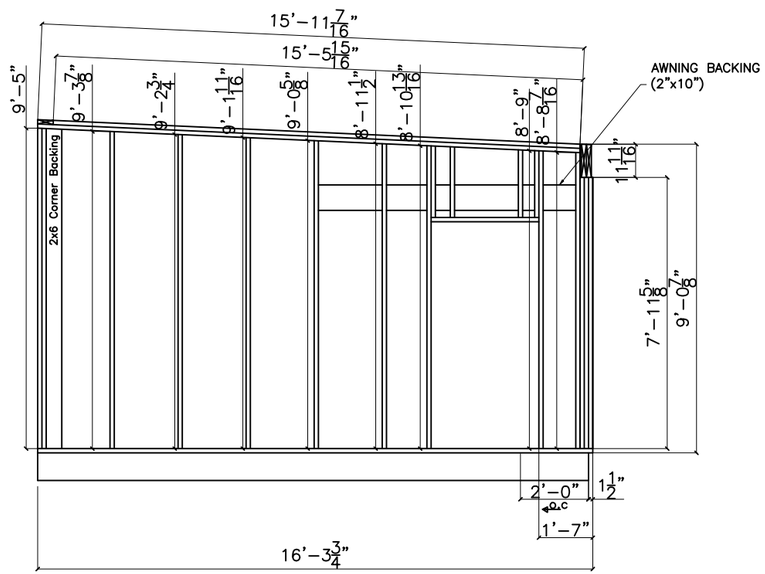

D

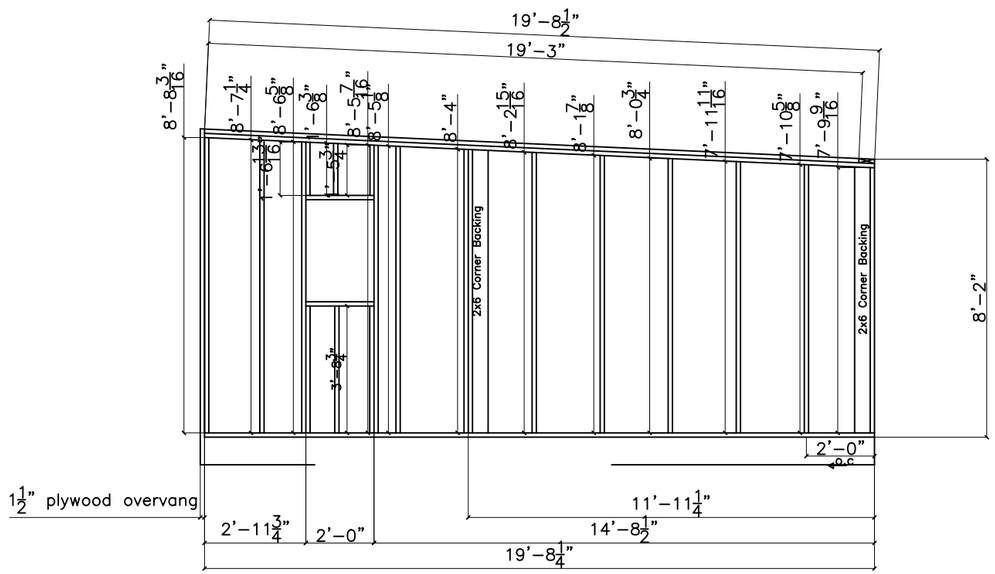

PUBLIC REFERENCE COPY / OWNER DETAILS REMOVED

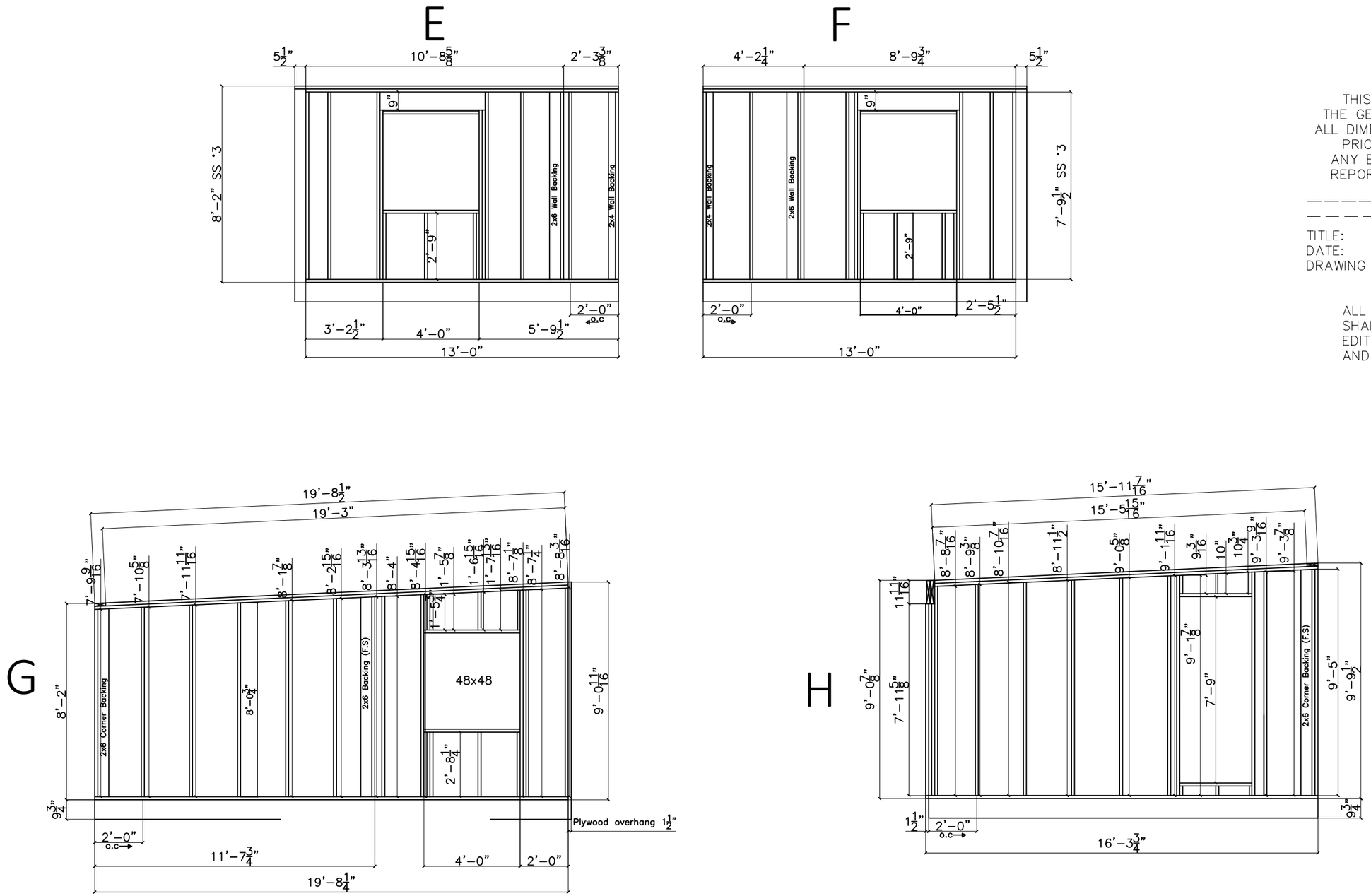

CLICK MODULAR HOMES

604-884-5122
WWW.CLICKMODULAR.COM

THIS DRAWING MUST NOT BE SCALED. THE GENERAL CONTRACTOR SHALL VERIFY ALL DIMENSIONS, DATUMS, AND ELEVATIONS PRIOR TO COMMENCEMENT OF WORK. ANY ERRORS OR OMISSIONS SHALL BE REPORTED AT ONCE TO THE DESIGNER.

TITLE: DAVIS EXTERIOR WALLS - 1OF2
DATE: 7 14:49:47
DRAWING BY: Rommel Divinagracia

ALL CONSTRUCTION AND MATERIALS SHALL COMPLY WITH THE LATEST EDITION OF LOCAL BUILDING CODE AND BY-LAWS

PUBLIC REFERENCE COPY / OWNER DETAILS REMOVED

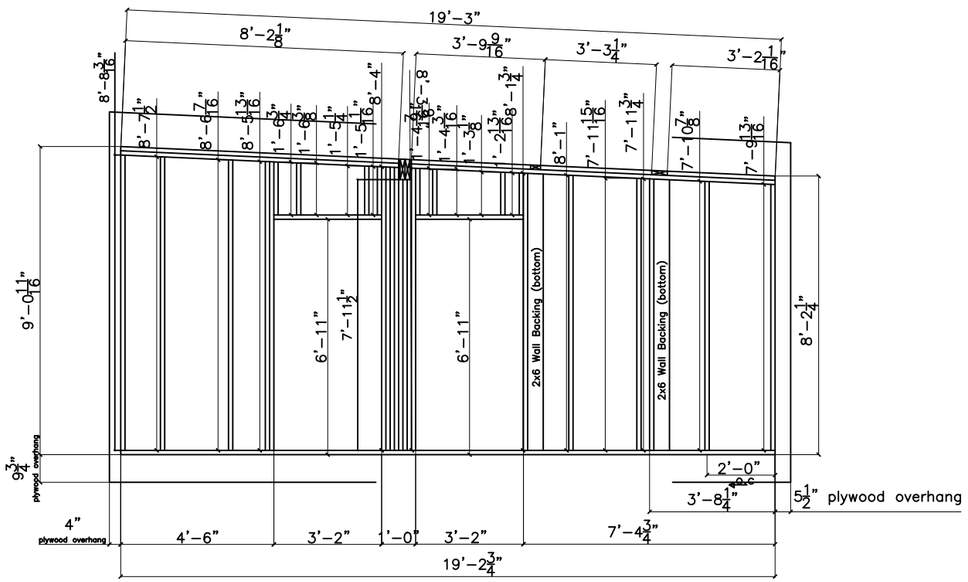

3

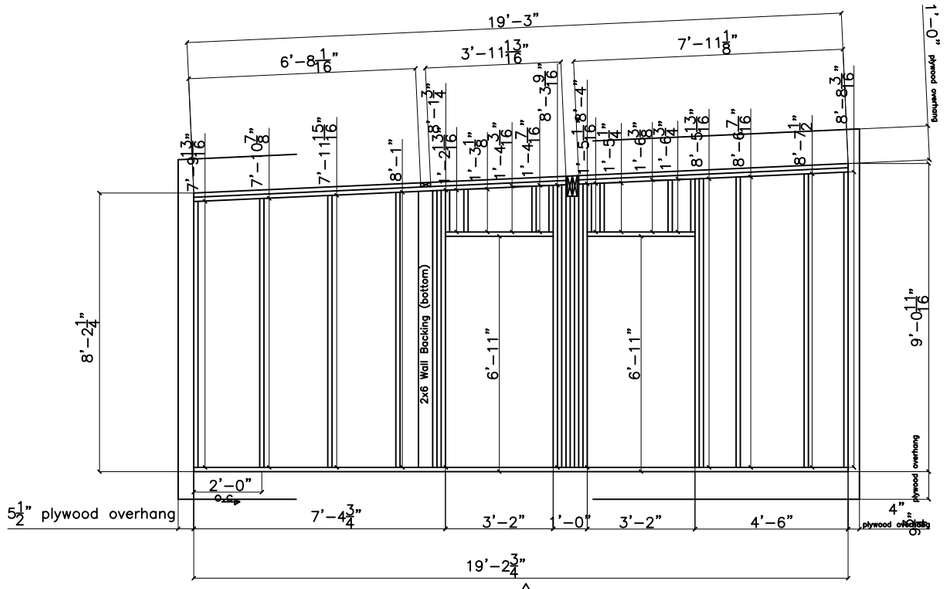

2

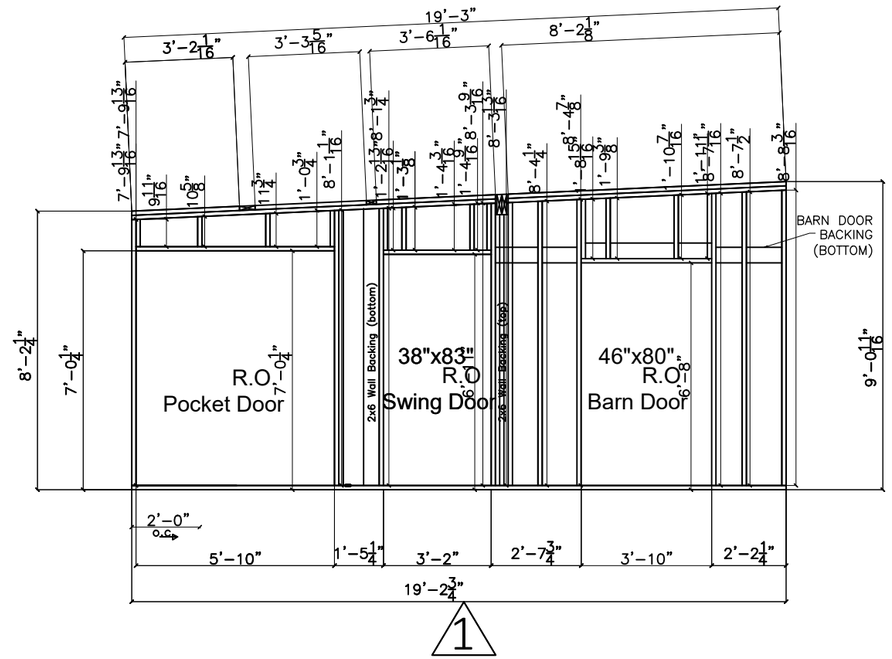

1

Shear Wall A

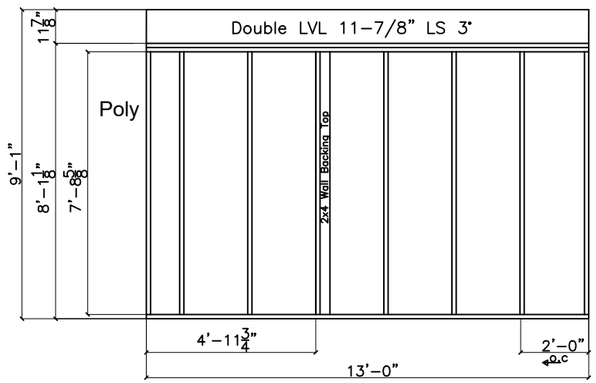

Shear Wall B

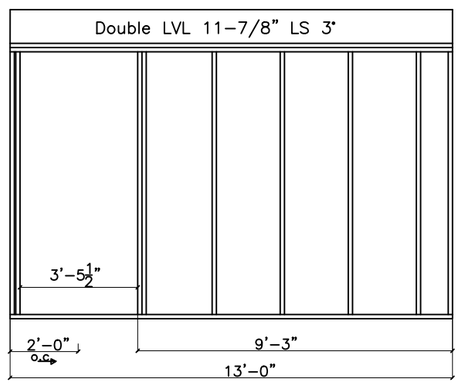

CLICK MODULAR HOMES

604-884-5122
WWW.CLICKMODULAR.COM

THIS DRAWING MUST NOT BE SCALED.
THE GENERAL CONTRACTOR SHALL VERIFY ALL DIMENSIONS, DATUMS, AND ELEVATIONS PRIOR TO COMMENCEMENT OF WORK.
ANY ERRORS OR OMISSIONS SHALL BE REPORTED AT ONCE TO THE DESIGNER.

TITLE: DAVIS INT. WALLS FRAMING 1OF2
DATE: 2026-09-17 14:49:23
DRAWING BY: Rommel Divinagracia

ALL CONSTRUCTION AND MATERIALS SHALL COMPLY WITH THE LATEST EDITION OF LOCAL BUILDING CODE AND BY-LAWS

PUBLIC REFERENCE COPY / OWNER DETAILS REMOVED

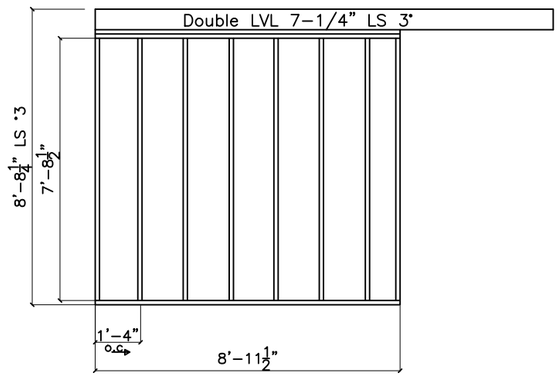

4

2x6 Wall

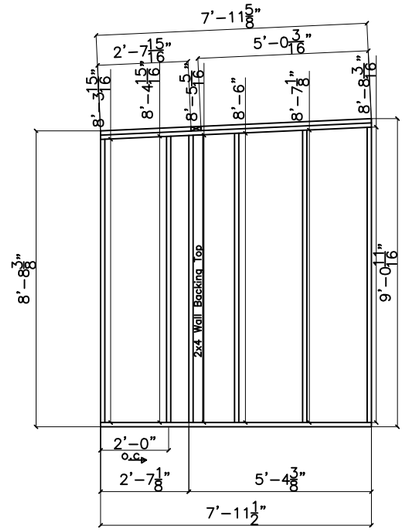

5

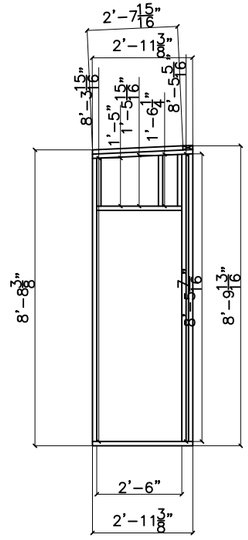

6

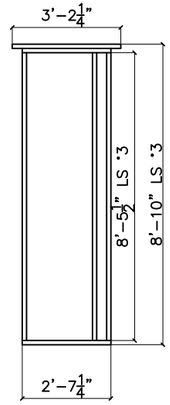

7

CLICK MODULAR HOMES
604–884–5122
WWW.CLICKMODULAR.COM

THIS DRAWING MUST NOT BE SCALED.
THE GENERAL CONTRACTOR SHALL VERIFY ALL DIMENSIONS, DATUMS, AND ELEVATIONS PRIOR TO COMMENCEMENT OF WORK.
ANY ERRORS OR OMISSIONS SHALL BE REPORTED AT ONCE TO THE DESIGNER.

TITLE: DAVIS INT. WALLS FRAMING 2OF2
DATE: 2026-09-17 14:51:58
DRAWING BY: Rommel Divinagracia

ALL CONSTRUCTION AND MATERIALS SHALL COMPLY WITH THE LATEST EDITION OF LOCAL BUILDING CODE AND BY–LAWS

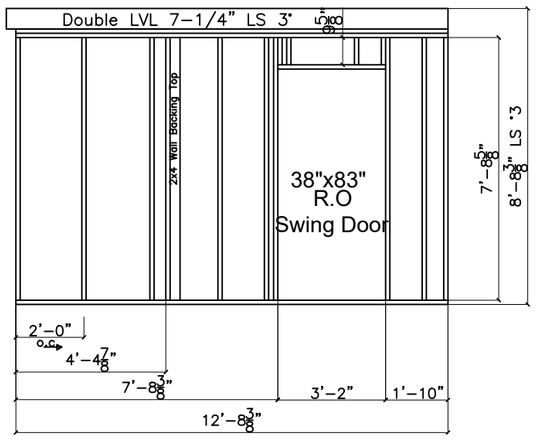

8

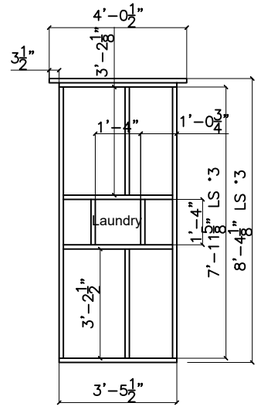

9

2x6 Wall

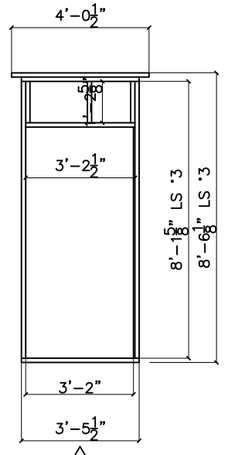

10

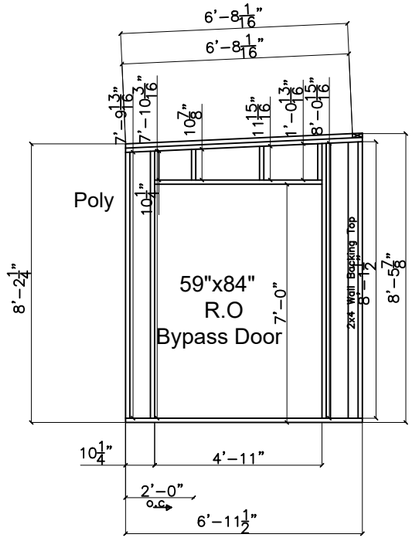

11

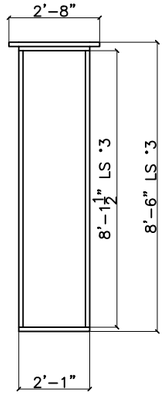

12

PUBLIC REFERENCE COPY / OWNER DETAILS REMOVED

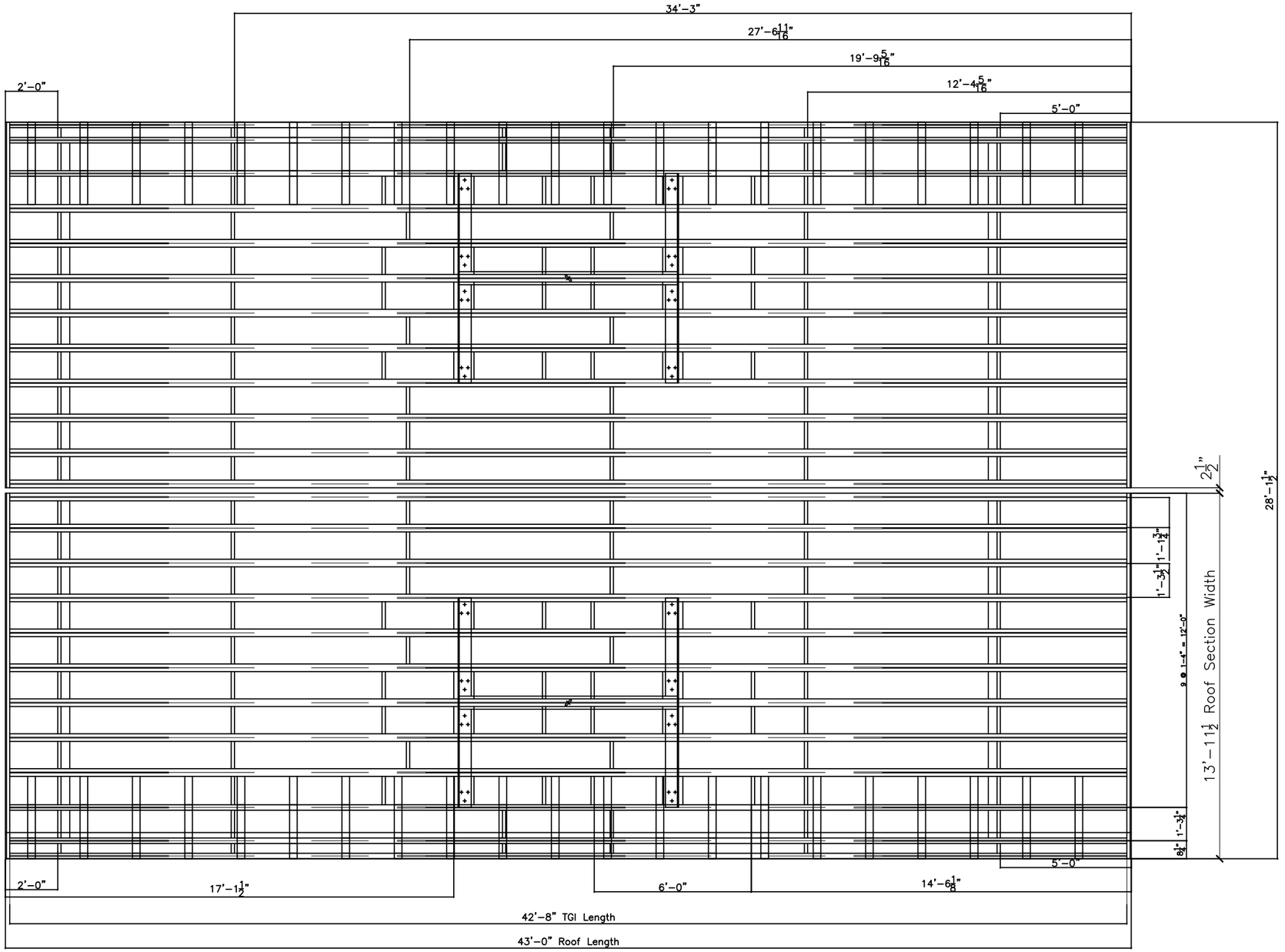

11-7/8" LPI 42PLUS x 43' length- 18pcs
9-1/2" LPI 20PLUS x 43' length- 6pcs
4'x8'x1/2" plywood sheet-44pcs
1"x4"x10'-14pcs
2"x4"x10'-21pcs
2"x4"x16'-4pcs
2"x6"x8'-60pcs
2"x10"x14' - 20pcs
2"x10"x16' - 4pcs
H-clips - 3packs
Roof underlay (Roofnado Lap-lock) - 7 rolls

CLICK MODULAR HOMES
604-884-5122
WWW.CLICKMODULAR.COM

THIS DRAWING MUST NOT BE SCALED.
THE GENERAL CONTRACTOR SHALL VERIFY ALL DIMENSIONS, DATUMS, AND ELEVATIONS PRIOR TO COMMENCEMENT OF WORK.
ANY ERRORS OR OMISSIONS SHALL BE REPORTED AT ONCE TO THE DESIGNER.

TITLE: DAVIS ROOF FRAMING
DATE: 7 14:51:45
DRAWING BY: Rommel Divinagracia

ALL CONSTRUCTION AND MATERIALS SHALL COMPLY WITH THE LATEST EDITION OF LOCAL BUILDING CODE AND BY-LAWS

PUBLIC REFERENCE COPY / OWNER DETAILS REMOVED

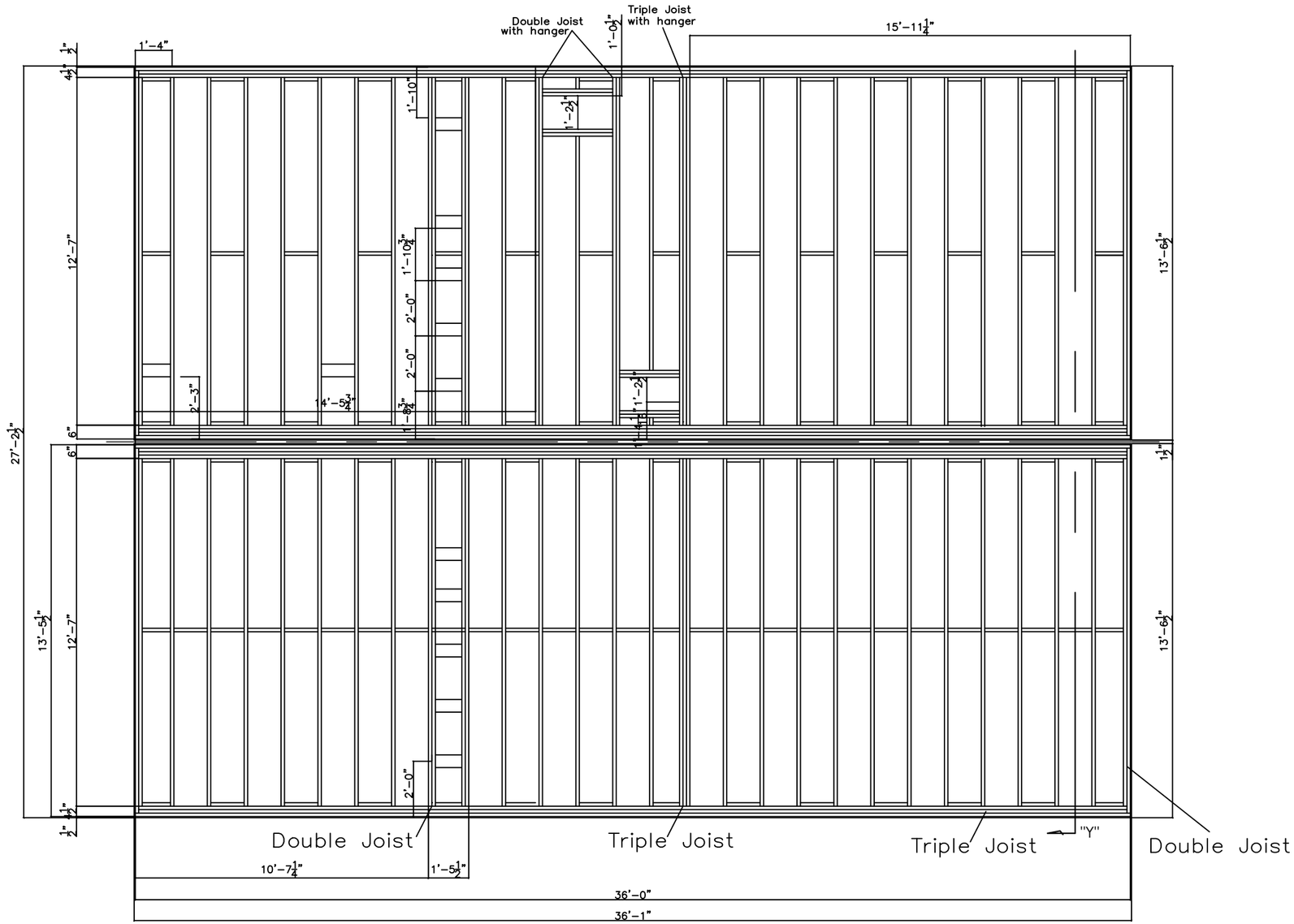

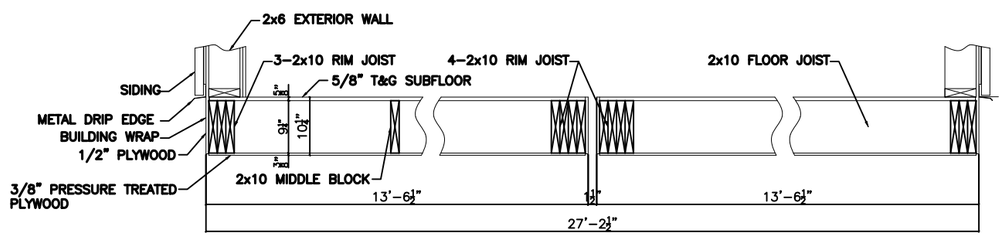

SECTION "Y"

CLICK MODULAR HOMES
604-884-5122
WWW.CLICKMODULAR.COM

THIS DRAWING MUST NOT BE SCALED.
THE GENERAL CONTRACTOR SHALL VERIFY ALL DIMENSIONS, DATUMS, AND ELEVATIONS PRIOR TO COMMENCEMENT OF WORK.
ANY ERRORS OR OMISSIONS SHALL BE REPORTED AT ONCE TO THE DESIGNER.

TITLE: DAVIS FLOOR FRAMING
DATE: 2026-09-17 14:51:31
DRAWING BY: Rommel Divinagracia

ALL CONSTRUCTION AND MATERIALS SHALL COMPLY WITH THE LATEST EDITION OF LOCAL BUILDING CODE AND BY-LAWS

PUBLIC REFERENCE COPY / OWNER DETAILS REMOVED

LEGENDS:

-HRV UNIT (ALDES H95-TRG)

-SUPPLY

-RETURN

-SUPPLY DIFFUSER (CEILING)

-SUPPLY DIFFUSER (WALL)

-RETURN DIFFUSER (CEILING)

-OUTSIDE AIR (Ø5" FLEXIBLE INSULATED DUCT)

-FRESH AIR INTAKE

-EXHAUST AIR (Ø5" FLEXIBLE INSULATED DUCT)

-EXHAUST SOFFIT VENT

-DUCTING CONNECTIONS

-ELECTRICAL PANEL

HP-IU -HEAT PUMP INDOOR UNIT

HP-OU -HEAT PUMP OUTDOOR UNIT

-HEAT PUMP REFRIGERANT PIPING

-HEAT PUMP POWER

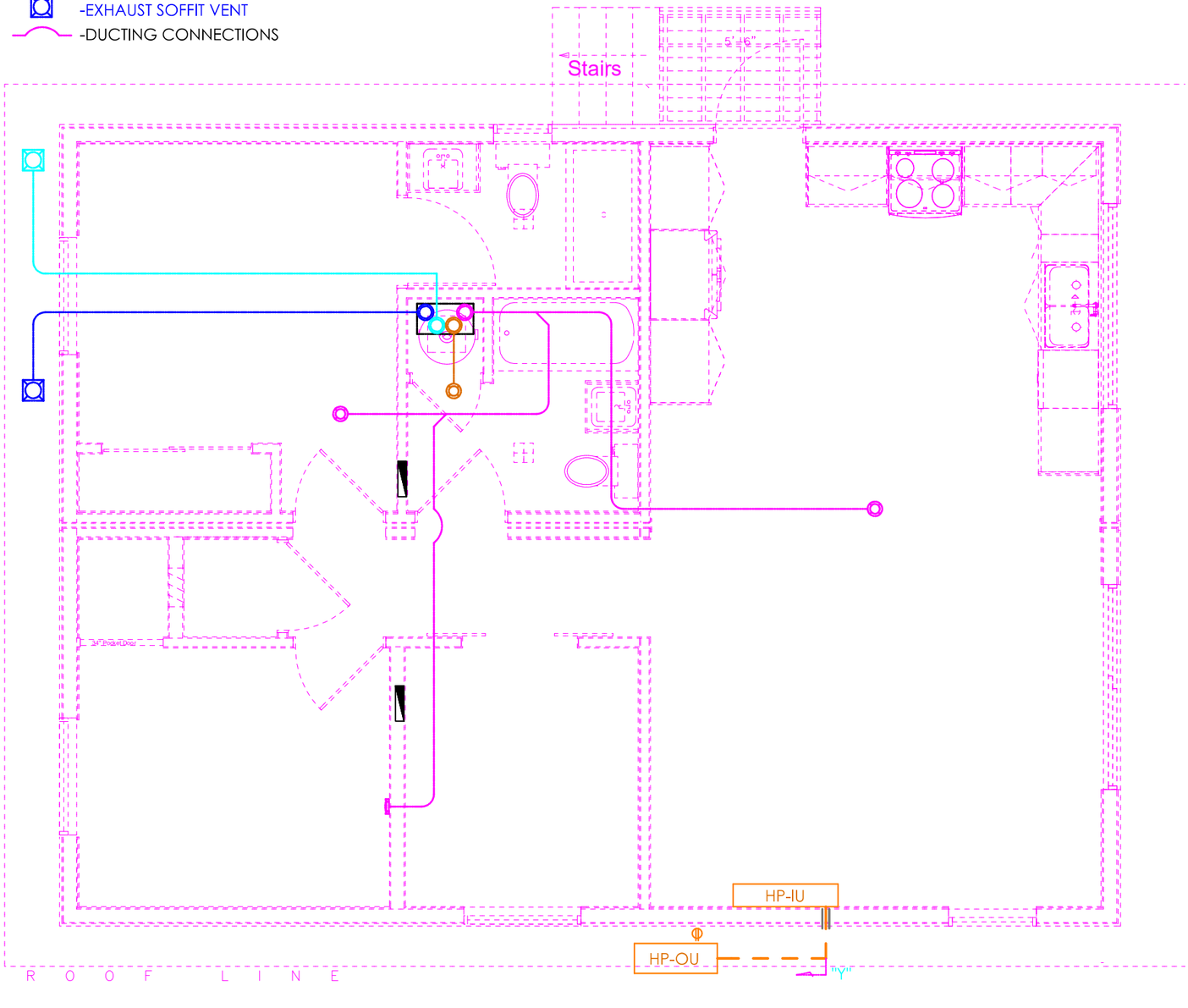

PUBLIC REFERENCE COPY / OWNER DETAILS REMOVED