Davis Modular Brackendale

, Squamish, B.C.

Issued For Construction

10 Nov 2026

DRAWING LIST

DRAWING LIST				
DRAWING NO.	DRAWING TITLE	REVISION NO.	DATE	REVISON
S0	Cover Page	3	10 Nov 2026	Issued For Construction
S1.1	Structural Notes	3	10 Nov 2026	Issued For Construction
S1.2	Structural Notes	3	10 Nov 2026	Issued For Construction
S2.1	Foundation Plan	3	10 Nov 2026	Issued For Construction
S2.2	Pile Cap Loads	3	10 Nov 2026	Issued For Construction
S3.1	Concrete Details	3	10 Nov 2026	Issued For Construction
S4.1	Framing Details	3	10 Nov 2026	Issued For Construction

COPYRIGHT

INTELLECTUAL PROPERTY RIGHTS IN ANY INFORMATION OR DATA SUPPLIED WITHIN THIS DRAWING ARE OWNED BY OR LICENSED TO IKON ENGINEERS CANADA LTD. IT IS PROHIBITED TO COPY, REPRODUCE, STORE, PUBLISH OR COMMERCIALISE INFORMATION CONTAINED WITHIN THIS DRAWING WITHOUT PRIOR WRITTEN APPROVAL FROM IKON ENGINEERS CANADA LTD. © 2025 IKON ENGINEERS CANADA LTD

NO.	Date	Description
3	10 Nov 2026	Issued For Construction
2	14 Oct 2026	Issued For Building Permit
1	18 Sep 2026	Issued For Coordination

REVISION

CONSULTANT

IKON ENGINEERS CANADA LTD.
9 - 1005 ALPHA LAKE ROAD,
WHISTLER B.C. V8E 0H5
T: +1 (604) 283-5208
E: hello@ikonengineers.com
FORMERLY TWIN PEAKS ENGINEERING LTD.

ENGINEERS & GEOSCIENTISTS
BRITISH COLUMBIA
PERMIT TO PRACTICE #:
1001438

SEAL

PROJECT TITLE

Davis Modular Brackendale

, Squamish, B.C.

SHEET TITLE

Cover Page

JOB NO.: 26086 - SP

DWN: AB

SCALE: As indicated

DWG NO. S0

REV. 3

PROJECT INFORMATION:

PROJECT DESIGN INFORMATION:

1. PROJECT NAME: Davis Modular Brackendale
2. PROJECT ADDRESS: , Squamish, B.C.

- LATITUDE: 49.765
- LONGITUDE: -123.155
- ELEVATION: 11 m (GEODETIC CGVD28)

3. PROJECT CLASSIFICATION AND SCOPE: FOUNDATION AND STEEL SUBSTRUCTURE FOR PREFABRICATED MODULAR HOME
4. APPLICABLE CODE AND PROVISIONS: BCBC2024 Part 4 & Part 9

DESIGN LOADS AND PARAMETERS:

1. DESIGN LOADS:

- IMPORTANCE CATEGORY: Normal
- SNOW (I_S) = 1.0 (ULS) ; 0.9 (SLS)
- WIND (I_W) = 1.0 (ULS) ; 0.75 (SLS)
- SEISMIC (I_E) = 1.0 (ULS)

TYPE OF LOAD	LIVE (psf)	DEAD (psf)	NOTES
GROUND SNOW LOAD (Ss)	58		
RAIN LOAD (Sr)	15		
ROOF SNOW LOAD (S)	61	15	See plans for drift and sliding snow accumulations
DECK LOADS (COVERED)	40	40	Assumes waterproof deck with pavers
DECK LOADS (UNCOVERED)	61	40	
FLOOR LOADS	40	25	

Roof Snow Load Calculations – BCBC2024:
a. Ground Snow Load, Ss = 2.8kPa = 58psf
b. Rain Load, Sr = 0.7kPa = 15psf
c. Roof Snow Load Calc: S = Is x [Ss x (Cb x Cw x Cs x Ca) + Sr] = 1 x [2.8kPa x (0.8 x 1 x 1 x 1) + 0.7kPa] = 2.9kPa = 61psf
d. Roof Dead Load includes allowance of 0.24kPa (5 psf) for future solar hot water collectors in accordance with the Building Act BC Reg. 101/2011

NOTES:
- Dead loads - Self-weight of structure plus superimposed dead loads (roofing, ceilings, partitions, services, floor assemblies).
- Applicable load combinations follow the Limit States Design (LSD) load combinations in BCBC 2024 / NBC 2020.
- Any loads from suspended equipment, hoists, partitions heavier than typical, or other non-standard loads shall be confirmed with IKON prior to installation.

2. WIND PRESSURE:

TYPE OF LOAD	WIND (psf)
q1/50	9.2
q1/10	6.9

a. 1.0 kPa (20.9 psf) net factored wind load applied roofs to produce uplift unless noted otherwise.

3. SEISMIC PARAMETERS:

PARAMETER	VALUE	NOTES
SITE DESIGNATION	SITE CLASS (X)	
SITE CLASSIFICATION	E	As per geotechnical engineer
SPECTRAL ACCELERATIONS	Sa(0.2) = 0.836 Sa(0.5) = 0.931 Sa(1.0) = 0.727 Sa(2) = 0.481 Sa(5) = 0.164 Sa(10) = 0.061	
PEAK GROUND ACCELERATION	PGA (g) = 0.382	
PEAK GROUND VELOCITY	PGV (m/s) = 0.682	
TYPE OF SFRS (X-DIRECTION)	Rd = 1.5 ; Ro = 1.3	Steel - Conventional Construction Braced Frame
TYPE OF SFRS (Y-DIRECTION)	Rd= 1.5 ; Ro = 1.3	Steel - Conventional Construction Braced Frame
SEISMIC CATEGORY	SC4	
ANALYSIS METHOD	Equivalent Static Force Procedure	

a. The lateral design of this structure and seismic force resisting system has been designed in accordance with Division B – Part 4 of the 2024 British Columbia Building Code.
b. The seismic design values shown above have been derived from the 2020 National Building Code of Canada – Seismic Hazard Calculator Tool.

4. FOUNDATION PARAMETERS:

a. The foundations have been designed in accordance with the following geotechnical parameters as depicted in the investigation report and assessment by:

Kontur Geotechnical Consultants Geotechnical Assessment Report No. K-261429-00 dated 8 July 2026.

Soil Bearing Capacity (SLS): N/A
Soil Bearing Capacity (ULS): N/A
Foundation Type: Helical Piles
Minimum Frost Protection Depth: 18"

5. FLOOD PARAMETERS:

a. The structure has been designed in accordance with the following geological hazard parameters regarding flood loads depicted in the investigation report and assessment by:

Kontur Geotechnical Consultants Geological Hazard Assessment Report No. K-261429-00 dated 8 July 2026.

Flood Construction Level (FCL): 14.0m (Geodetic CGVD28)
Flood Velocity: 2.8m/s

LEGEND:

STRUCTURAL ELEMENT	APPEARANCE
EXISTING CONCRETE FOUNDATION WALL AS PER SCHEDULE	
NEW CONCRETE WALL (FULL HEIGHT) AS PER SCHEDULE	
NEW CONCRETE WALL (UPSTAND, PARTIAL HEIGHT) AS PER SCHEDULE	
CONCRETE WALL KNOCKOUT OR CHANGE IN ELEVATION	
FOOTING AS PER SCHEDULE	F1
NON-STRUCTURAL PARTITION WALL	
LOAD BEARING SHEAR WALL AS NOTED ON PLAN AND SCHEDULE	
LOAD BEARING WALL AS NOTED ON PLAN AND SCHEDULE	
TIMBER POST AS NOTED ON PLAN	
POINT LOAD FROM ABOVE	
BEAM TO BEAM CONNECTION	
KING POST	(KP)
MOMENT CONNECTION	MC
HOLD DOWN CONNECTED TO ADJACENT MEMBER INSIDE WALL	HD
STRAP TIE HOLD DOWN CONNECTED TO FACE OF ASSOCIATED MEMBER	ST
TIMBER OR STEEL BEAM AS NOTED ON PLAN	
FLOOR OR ROOF JOIST AS NOTED ON PLAN - DIRECTION OF SPAN	
EXTENT OF JOISTS	
DETAIL OR SECTION MARKER - DETAIL NUMBER/SHEET NUMBER	1 S2.1
LOAD BEARING OR SHEAR WALL FROM ABOVE	
STEP OR CHANGE IN ELEVATION OF ELEMENT	
STEEL COLUMN - WIDE FLANGE OR HSS AS NOTED ON PLAN	
BREAK LINE OR VISUAL SEPARATION	
REINFORCED CONCRETE BEAM AS PER SCHEDULE	

ABBREVIATIONS:

A:
ARCH ARCHITECT OR ARCHITECTURAL DRAWINGS
AB ANCHOR BOLT
ADD ADDITIONAL
Af AXIAL FORCE (FACTORED)
ALT ALTERNATE/ALTERNATING
ALU ALUMINUM
APPROX APPROXIMATE

B:
BM BEAM
BTM BOTTOM
BTW BETWEEN
BLDG BUILDING
BLK BLOCK
BLKG BLOCKING
BCBC BRITISH COLUMBIA BUILDING CODE
BF BOTH FACES
BW BOTH WAYS
BLL BOTTOM LOWER LAYER
BUL BOTTOM UPPER LAYER

C:
CANT CANTILEVER
CL CENTRELINE
CLR CLEAR
CLT CROSS-LAMINATED TIMBER
CVR COVER
COG CENTRE OF GRAVITY
COL COLUMN
CONT CONTINUOUS
C/W COMPLETE WITH
CC CENTRE TO CENTRE
Cf COMPRESSION FORCE (FACTORED)
CIP CAST-IN PLACE
CJP COMPLETE JOINT PENETRATION
CMU CONCRETE MASONRY UNIT
CONC CONCRETE
CONN CONNECTION
CONST CONSTRUCTION
COORD COORDINATION
CTR CENTRE
CJ CONTROL JOINT
CTJ CONSTRUCTION JOINT

D:
DIA DIAMETER
DL DEAD LOAD
DP DEEP/DEPTH
DB DROPPED BEAM
DBL DOUBLE
DFP DOUGLAS FIR PLYWOOD
DIAG DIAGONAL
DIM DIMENSION
DWN DOWN
DTS DEPTH TO SUIT
D.FIR-L DOUGLAS FIR LARCH
DWG DRAWINGS
DO DITTO

E:
EQ EQUAL
EXT EXTERIOR
EXST EXISTING
EN EDGE NAILING
EE EACH END
EF EACH FACE
EL ELEVATION
ELEC ELECTRICAL
EMBED EMBEDMENT
ENG ENGINEER
EOR ENGINEER OF RECORD
EQUIP EQUIPMENT
ES EACH SIDE
EW EACH WAY
EXP EXPANSION

F:
FN FIELD NAILING
FB FLUSH BEAM
FF FINISHED FLOOR
FAB FABRICATE
FLR FLOOR
FDN FOUNDATION
FS FAR SIDE
FTG FOOTING
FO FACE OF
FLG FLANGE

G:
GALV GALVANIZED
GEO GEOTECHNICAL ENGINEER
GA GAUGE
GL GRID LINE
GLULAM GLULAM
GT GIRDER TRUSS

H:
HORZ HORIZONTAL
HD HOLD DOWN
HDG HOT DIPPED GALVANIZED
HK HOOK
HT HEIGHT

I:
IE IKON ENGINEERS
IF INSIDE FACE
ID INSIDE DIAMETER
INT INTERIOR
INV INVERTED

K:
KIPS KILOPOUNDS

L:
LG LONG
LV LENGTH VARIES
LTS LENGTH TO SUIT
LL LIVE LOAD
LONG LONGITUDINAL
LSL LAMINATED STRAND LUMBER
LVL LAMINATED VENEER LUMBER
LB LOAD BEARING

M:
MAX MAXIMUM
MIN MINIMUM
MFR MANUFACTURER
MTRL MATERIAL
MECH MECHANICAL
Mf BENDING MOMENT (FACTORED)
MISC MISCELLANEOUS

N:
NTS NOT TO SCALE
NR NEAR
NS NORTHERN SPECIES
NBCC NATIONAL BUILDING CODE OF CANADA
No./NUM NUMBER
NOM NOMINAL
NS NEAR SIDE
NDT NON-DESTRUCTIVE TESTING
NLB NON LOAD BEARING

O:
O.C. ON CENTRE
OPP OPPOSITE
OPN OPENING
OVR OVER
OD OUTSIDE DIAMETER
OVRS OVERSIZED
OF OUTSIDE FACE
OH OVERHANG

P:
PT PRESSURE TREATED
PEN PRESSURE TREATED
PERP PERPENDICULAR
PL PLATE
PSL PARALLEL STRAND LUMBER
PTD POST TENSIONED
PREFAB PREFABRICATED

Q:
QTY QUANTITY

R:
REQ REQUIRED
R/W REINFORCED WITH
RND ROUND
RAD RADIUS
RC REINFORCED CONCRETE
REF REFER
REINF REINFORCEMENT
RO ROUGH OPENING
RTU ROOF TOP UNIT

S:
SS SELECT STRUCTURAL
SSTL STAINLESS STEEL
STL STEEL
SYM SYMMETRICAL
SIM SIMILAR
STAG. STAGGERED
SCHED SCHEDULE
SDL SUPERIMPOSED DEAD LOAD
SEC SECTION
SFRS SEISMIC FORCE RESISTING SYSTEM
SL SNOW LOAD
SL_D SNOW LOAD FROM DRIFT
SL_S SNOW LOAD FROM SLIDING
SLS SERVICEABILITY LIMIT STATE
SOG SLAB ON GRADE
SPECS SPECIFICATIONS
SPF SPRUCE PINE FIR
SPRT SUPPORT
SST SIMPSON STRONG-TIE
STD STANDARD
STF STIFFENER
STRUC STRUCTURAL
SW SHEARWALL

T:
TBC TO BE CONFIRMED
TBD TO BE DETERMINED
T&B TOP AND BOTTOM
TYP TYPICAL
TP TOP
T&G TONGUE AND GROOVE
Tf TENSION FORCE (FACTORED)
TO TOP OF
TRANS TRANSVERSE
TOC TOP OF CONCRETE
TOS TOP OF STEEL
TLL TOP LOWER LAYER
TUL TOP UPPER LAYER
TEMP TEMPORARY

U:
UDR UNDER
UNO UNLESS NOTED OTHERWISE
U/S UNDERSIDE
ULS ULTIMATE LIMIT STATE

V:
VERT VERTICAL
Vf SHEAR FORCE (FACTORED)
VOS VERIFY ON SITE

W:
W/ WITH
WTS WIDTH TO SUIT
WD WIDE/WIDTH
W/O WITHOUT
WF WIDE FLANGE
WP WORK POINT
WTG WEIGHT
WWM WELDED WIRE MESH

PUBLIC REFERENCE COPY / OWNER DETAILS REMOVED

GENERAL:

1. All information in these structural drawings including designs, specifications, plans, details and concepts is classified an instrument of service and remain the sole property of Ikon Engineers Canada Ltd (IKON). These drawings shall not be used without the written consent of IKON or outside this project and scope.
2. The contractor shall check all dimensions and details on the structural drawings for compatibility with architectural and other consultants' drawings before commencing work. Do not scale off drawings and noted dimensions always take precedence.
3. These engineering drawings have been prepared from information available at the time of issue and in conjunction with the provided architectural or design drawings. This information may be the subject of change prior to or during construction. The contractor is to advise the structural engineer where discrepancies or omissions occur.
4. Any such discrepancy, omission, or variation not reported shall be the responsibility of the contractor, and corrective work shall be performed as directed by the structural engineer. The contractor is responsible for all costs associated with the correction of the deficiencies, as determined by the structural engineer.
5. All work or construction shall comply with the applicable building codes, regulations and safety requirements.
6. Review of the work or any portion thereof by the structural engineer shall not in any way relieve the contractor of his obligation to comply with the contract documents.
7. These drawings show permanent complete primary structure only. Temporary works including excavation, geotechnical, shoring, formwork, back propping and temporary bracing are the responsibility of the contractor. The design and certification of all temporary works is the responsibility of the contractor.
8. The contractor is responsible for developing and implementing a workplace health and safety plan for implementation on the work site during demolition, temporary works and construction.
9. The intended use of these structural drawings is limited to the revision description. Do not construct from these drawings unless they are marked "Issued For Construction".
10. These notes apply to all structural drawings and supersede conflicting information on architectural or other consultant drawings, unless written clarification is provided by IKON.

DESIGN LOADS:

1. Refer to cover page for design loads, structure classification and lateral parameters. Additional loads such as drift snow, sliding snow and localized increases in superimposed loads as depicted in project information and noted on plan.

SCOPE INCLUSIONS & EXCLUSIONS:

1. IKON services are limited to the structural design and review of the elements shown on these structural drawings and identified in our agreement with the Client. IKON has not reviewed, and takes no responsibility for, architectural, mechanical, electrical, civil, landscape, or other disciplines except where explicitly noted.
2. Structural design is based on information provided by others, including architectural drawings, geotechnical reports, survey data, and applicable building codes and standards. IKON is not responsible for errors, omissions, or inaccuracies in information or documents provided by others.
3. These drawings are intended for use by qualified contractors and trades familiar with standard construction practices in British Columbia. Construction means, methods, sequencing, temporary works, and site safety are the sole responsibility of the Contractor.
4. IKON field reviews, where required by the Building Code or the authority having jurisdiction, are carried out at intervals appropriate to the complexity of the work to assess general conformance with the design concept. Continuous inspection is not provided, and our reviews do not relieve the Contractor of responsibility for quality control, workmanship, and compliance with the contract documents.
5. Any changes, substitutions, or deviations from these structural documents must be submitted to IKON for review and written acceptance prior to implementation. IKON assumes no responsibility for work carried out contrary to, or without, such written acceptance.
6. The use of these drawings for any project other than that identified in the title block, or for any purpose not expressly authorized in writing by IKON, is strictly prohibited.
7. IKON shall be engaged independently of the original contract for all structural review and design of unforeseen penetrations through structural members, rectification works due to site installation errors or misalignments, solutions for construction errors or deviation from structural design and re-design of structure for unplanned changes in loading or installed equipment.

Excluded Services:

- Design or review of architectural, mechanical, electrical, plumbing, civil, or landscape elements.
- Secondary/non-structural components (e.g., cladding, glazing, handrails, elevator rails, seismic bracing for non-structural items).
- Geotechnical investigation, foundation recommendations, or soil-structure interaction analysis.
- Construction means, methods, sequencing, temporary works, or site safety.
- Continuous site observation or quality control inspection.
- Building Envelope or waterproofing details.
- Surveying, as-built verification, or third-party testing/certification.
- Changes due to field conditions, owner-directed modifications, or information provided by others.

ARCHITECTURAL AND SECONDARY COMPONENTS:

1. Secondary components and their connections that are not shown in these design drawings and are not a part of the primary structural system, lateral stability and foundations, are excluded from IKON's scope of work unless noted otherwise.
2. Refer to the architectural, mechanical, and electrical drawings and specifications for requirements relating to secondary structural components, including but not limited to glazing systems, glazed partitions, curtain walls, steel stud or framed partition walls, exterior cladding, snow retention systems, skylights, handrails, guardrails, upstands, brick veneer and cladding support and connections, elevator rails and beams, and seismic restraints for architectural, mechanical, and electrical items.
3. The design, detailing and inspection of the above items is the responsibility of the associated Specialty Engineer or Contractor. Submit sealed shop drawings to IKON for review of any secondary component that may influence the primary structural system or design loads. Shop drawings are to contain connection specifications and reactions as required to review the primary structural system and lateral stability.
4. Secondary structural and non-structural building elements shall not be rigidly connected to the primary structure in a way that would cause unintended load redistribution. Provide appropriate expansion and movement joints at the sides and top of rigid components and submit connection and support details for the Engineer of Record review.

SUBMITTALS:

1. Shop drawings, in PDF format, for structural steel, reinforcing steel, precast or prestressed elements, post-tensioning strands, engineered wood products, and trusses shall be submitted to IKON for review prior to fabrication. Allow a minimum of two (2) weeks for review and ensure all accompanying letters of assurance are completed correctly.
2. Shop drawings are reviewed by IKON for their compliance with the structural design and parameters. It is the responsibility of the contractor to ensure all details and dimensions are accurate and correct.
3. Any proposed substitutions of materials or systems shall be submitted with supporting technical data and stamped design where required, demonstrating equivalence to the original design and compliance with BCBC 2024 and applicable CSA standards.

INSPECTION AND TESTING:

1. The contractor is required to pre-inspect the work and call the structural engineer 48 hours in advance for review of completed works prior to concealment. All work shall be made accessible for field review and inspection.
2. Failure to give required notification may result in the structural engineer requesting the removal and replacement of the work at the contractor expense. The contractor shall be responsible for the correction of any deficiencies not in accordance with these structural drawings.
3. The following items require materials testing or field review by others but not limited to:
   a. Soil bearing and backfill
   b. Formwork and/or shoring
   c. Concrete (in accordance with CSA A23.1:24, A23.2:24)
   d. Masonry units and grouting
4. The following items require field review by the structural engineer prior to concealment, but not limited to:
   a. Concrete and masonry reinforcing steel
   b. Structural steel framing and metal decking
   c. Rough carpentry and framing
   d. Prefabricated engineered structural wood including glue-laminated timber, cross-laminated timber, dowel laminated timber and nail laminated timber.
   e. Prefabricated wood trusses
   f. Open-web steel joists

FOUNDATIONS AND SOILS:

1. Refer to Cover Page for Geotechnical Parameters used in the design of the foundations and reference Investigation Report.
2. The contractor is responsible for having a geotechnical engineer confirm the soil bearing/backfill capacity, soil compaction, ground water conditions, settlement criteria, pile capacities and excavation shoring prior to placing foundations or slabs.
3. If soil conditions differ from those described in the geotechnical report or assumed on the drawings, notify IKON and the geotechnical engineer immediately.
4. Where required, the contractor is responsible for having the authority having jurisdiction inspect all footing placements prior to pouring.
5. Provide minimum frost protection and drainage as per recommendations by the geotechnical engineer.
6. Footing elevations if shown are not final and may vary according to site conditions. Extend all footings to a bearing layer approved by the geotechnical engineer.
7. Do not undermine footings for excavation and adjacent footings or services as per below:
8. Follow geotechnical guidance in respect to site drainage and free draining back fill materials to prevent hydrostatic pressures on basement and retaining walls.
9. Do not backfill against basement or retaining walls until full 28 day concrete strength has been achieved or written approval from IKON. Do not backfill against basement walls until top of foundation wall bracing floor framing has been completed and inspected by IKON.

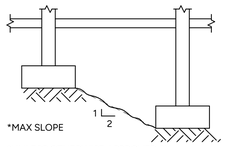

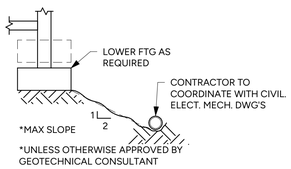

CONCRETE:

1. Provide concrete and perform work to CSA A23.1-24/A23.2-24
2. Minimum 28-day compressive strengths as indicated below. All concrete shall be normal weight 150pcf (23.6kN/m^3), Type GU cement, Type F or Cl fly ash unless noted otherwise on plan. Use 20mm aggregate for all concrete unless noted otherwise. Submit proposed mix design to IKON for approval:

ELEMENT	LOCATION	MIN. 28 DAY STRENGTH (MPa) U.N.O	SLUMP (mm)	EXPOSURE CLASS	MAX. AGGREGATE SIZE (mm)
Foundations	Pad Footings	25	60 -80	N / F-2 (exposed)	20
	Strip Footings	25	60-80	N / F-2 (exposed)	20
Slab on grade	Interior	25	90-110	N	20
	Exterior	32	90-110	C2	20
	Garage	25	90-110	C4	20
Columns and walls	Interior	32	80-100	N	20
	Exterior	32	80-100	F2	20
	Retaining	32	80-100	F2	20
	Parking	32	80-100	C1	20
Suspended slabs and beams	Interior	32	80-120	N	20
	Exterior	32	80-120	F1	20
	Exterior (WP)	32	80-120	F2	20
	Parking	32	80-120	C1	20
Concrete topping	Interior	20	80-120	As per application	14
	Exterior	32	80-120		14
	Steel Decking	32	80-120		14
Core filled CMU	Grout	12.5	80-120	-	10

Notes:
   a. Exposure classification reference: CSA A23.1:24
   b. Slumps noted before addition of superplasticizer
   c. Do not use admixtures other than air entrainment, standard water reducers or superplasticizers without approval from IKON
3. Reject all concrete when time between batching and placing exceeds 2 hrs
4. Consolidate all concrete using mechanical vibrators
5. Sawcut control joints for slabs on grade as soon as possible at maximum 20' spacing or at locations shown on plan.
6. Install all construction joints as shown on the drawings or as directed by the structural engineer.
7. Provide cover to reinforcement as required by CSA A23.3 and CSA A23.1 for the stated exposure class.
8. Protect concrete from adverse weather conditions in accordance with CSA A23.1:24 or as determined by the structural engineer.
9. Construct formwork in accordance with CSA S269.3. All formwork is the responsibility of the contractor.
10. Do not place concrete until the Structural Engineer of Record has reviewed the placement of reinforcing steel.
11. No coring is permitted without the written permission from IKON.

COLD WEATHER POUR PROCEDURES - REFER CSA A23.1:24 FOR MINIMUM REQUIREMENTS

Forecasted air temperature below 5°c but not below 0°c

1. Contractor shall be prepared pre-heat and cover all forms and slabs with insulated tarps or other insulating blankets
2. Mixing water shall be heated to give a minimum concrete temperature of 10°c at the point of pour.
3. Forms and reinforcing steel shall be free from ice and snow. The use of calcium chloride or other de-icing agents are **not permitted.** Concrete shall not be placed on any surface below 10°c.
4. Temperature of the concrete at all surfaces shall be kept at a minimum of 10°c for 3 days after pour until 40% design strength. Concrete shall be kept above freezing temperatures until it reaches 7mpa strength.

Forecasted air temperature below 0°c

1. Contractor shall be prepared to provide a heated enclosure. Heating to be started at least one hour ahead of pouring and maintained for a minimum of 3 days after.
2. Enclosures shall be constructed to withstand wind, and snow loads and shall be reasonably airtight. The housing shall provide sufficient space between the concrete and the enclosure to permit free circulation of warmed air. Heat shall be supplied to the enclosure by forced air, stationary heaters, hydronic heaters, or other heaters of various types.
3. Mixing water shall be heated to give a minimum concrete temperature of 10°c at the point of pour.
4. Forms and reinforcing steel shall be free from ice and snow. The use of calcium chloride or other de-icing agents are **not permitted.** Concrete shall not be placed on any surface below 10°c.
5. Temperature of the concrete at all surfaces shall be kept at a minimum of 10°c for 3 days after pour until 40% design strength. Concrete shall be kept above freezing temperatures until it reaches 7MPa strength.

CONCRETE TESTING:

1. Test concrete in accordance with CSA A23.2-24
2. Provide concrete for and cooperate in the preparation of test cylinders. Take three (3) cylinders for every 100 cubic meters or less of concrete placement. Minimum one test of three (3) cylinders for each pour.

CONCRETE REINFORCEMENT:

1. New deformed bars to CSA G30.18-21 Grade 400. Welded wire mesh to CSA G30.5.
2. Place reinforcement to CSA A23.1:24. Tie all bars securely in place to prevent displacement. Support slab reinforcement on suitable chairs or support at maximum 4'.
3. As per CSA A23.1:24, concrete cover to reinforcing steel as follows, unless noted otherwise:

CONCRETE COVER			
CONCRETE LOCATION		REQUIRED COVER mm [in.]	
		F.R.R = 0-2 hrs	F.R.R = 2-3hrs	NOTES
Footings or Surfaces in Contact with Ground		75 mm [3"]	75 mm [3"]	-
Formed Surfaces in Contact with Ground		50 mm [2"]	50 mm [2"]	-
Slab on Grade		Min. 40mm [1.5"] or Central in Depth		-
Columns Interior		40mm [1.5"]	50mm [2"]	To Ties
Columns Exterior		50mm [2"]	50mm [2"]	To Ties
Walls Interior		32mm [1.25"]	40mm [1.5"]	-
Walls Exterior		50mm [2"]	50mm [2"]	Exposed
Suspended Slabs - Interior		25mm [1"]	40mm [1.5"]	-
Suspended Slabs - Parking	Top	40mm [1.5"]	40mm [1.5"]	-
	Bottom	25mm [1"]	40mm [1.5"]	-
Suspended Beams		40mm [1.5"]	50mm [2"]	-
Other (U.N.O)		40mm [1.5"]	50mm [2"]	

4. Lapped tension splices (Class B) as follows for grade 400MPa reinforcing steel (unless noted on drawings):

LOCATION		BAR SIZE						WELDED WIRE MESH
		10M	15M	20M	25M	30M	35M	
Typical Walls	Vertical	400 [16"]	600 [24"]	750 [30"]	1200 [48"]	1400 [56"]	1650 [65"]	
	Horizontal	500 [20"]	750 [30"]	1000 [40"]	1550 [62"]	1850 [73"]	2150 [85"]	
Slabs & Beams	Bottom	400 [16"]	600 [24"]	750 [30"]	1200 [48"]	1400 [56"]	1650 [65"]	300 [12"] (Min. 2x Grid Spacing)
	Top	500 [20"]	750 [30"]	1000 [40"]	1550 [62"]	1850 [73"]	2150 [85"]	
Shear Walls	Vertical	450 [18"]	650 [26"]	900 [36"]	1350 [54"]	1650 [65"]	1900 [75"]	
	Horizontal	600 [24"]	875 [34"]	1150 [46"]	1800 [71"]	2100 [83"]	2450 [97"]	
Typical Columns (Compression)	-	300 [12"]	450 [18"]	600 [24"]	750 [30"]	875 [34"]	1000 [40"]	
Class B Tension Splice	25MPa	375 [15"]	575 [23"]	750 [30"]	1175 [47"]	1400 [56"]	1650 [66"]	
	30MPa	350 [14"]	525 [21"]	700 [28"]	1075 [43"]	1300 [52"]	1500 [60"]	
	35MPa	325 [13"]	475 [19"]	650 [26"]	1000 [40"]	1200 [48"]	1400 [56"]	
	40MPa	300 [12"]	450 [18"]	600 [24"]	925 [37"]	1125 [45"]	1300 [52"]	
	45MPa	300 [12"]	450 [18"]	600 [24"]	875 [35"]	1050 [42"]	1225 [49"]	
	50Mpa	300 [12"]	450 [18"]	600 [24"]	825 [33"]	1000 [40"]	1175 [47"]	

Notes:
   a. Table values assume f'c = 25MPa. Adjust values based on concrete strength as follows:
      30MPa – multiply by 0.92
      35MPa – multiply by 0.85
      40MPa – multiply by 0.79
      45MPa – multiply by 0.75
      50MPa – multiply by 0.71
   b. Where lap dimensions are shown on drawings, such dimensions shall control
   c. Lap splices in slab band bottom bars shall be enclosed within shear stirrups.
   d. Lap splices in beams shall be enclosed within stirrups.
   e. Stagger lap splices of bottom tension reinforcement. Percentage of lap splices shall not exceed 50% in one area.
   f. Multiply lap splices by 1.5 for epoxy coated reinforcing bars.

5. Unless otherwise noted on drawings, provide minimum two (2) – 15M bars around all openings larger than 18" at each side of opening extending 2'-0" past corner. Provide one (1) – 15M x 4'-0" long diagonal at each corner of all openings.
6. Provide (2) - 15M vertical bars full height at all wall ends and changes in elevation greater than 2'-0" unless noted otherwise.
7. Reinforcing steel shall conform to CSA G30.18; GFRP or galvanized bars shall be provided where specified.
8. Bending of bars shall conform to CSA A23.1/A23.3 requirements.
9. Splicing of bars shall only occur at locations and with lap lengths shown or as noted by Ikon Engineers; mechanical couplers shall be pre-approved.
10. Reinforcement shall be accurately placed and securely supported to maintain specified cover and position during concrete placement.

SUSPENDED SLABS:

1. Provide minimum temperature reinforcement (bottom) as follows:

SLAB THICKNESS	MINIMUM TEMP. REINFORCEMENT
Steel Deck Topping	6x6x10/10 WWM
4"	10M @ 20" o.c. E.W.
6"	10M @ 12" o.c. E.W.
8"	15M @ 20" o.c. E.W.
10"	15M @ 16" o.c. E.W.
12"	15M @ 12" o.c. E.W.

2. Provide minimum (2) – 15M continuous lapped 2'-0" at edge of slab, around all openings greater than 18" and 2'-0" past corners. Provide 1-15M03.5 diagonal at all corners.
3. Do cut slab reinforcement at services penetrations unless specifically noted.
4. Provide a minimum camber of span/500 for slabs and beams where span is greater than 10'-0" unless indicated on plan.
5. Construction joints not detailed on the drawings are to be approved by the structural engineer.
6. Provide corner bars to match horizontal wall reinforcement.
7. Designation Of Reinforcement:
   a) Reinforcement Bars Shown In Top of Beams or Slabs
   b) Reinforcement Bars Shown In Bottom of Beams or Slabs
   c) Straight Bars: 20M 11.06 @ 10" O.C. means 20M bars at 10" O.C., 11'-6" long hooked bars:

   C15M 03.11 @ 16" O.C. means 15M bars at 16" O.C., 3'-11" long hooked one end 90 degrees
   A15M 05.06 @ 16" O.C. means 15M bars at 16" O.C., 5'-6" long hooked one end 180 degrees

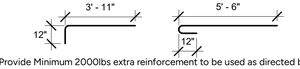

8. Provide Minimum 2000lbs extra reinforcement to be used as directed by the structural engineer.
9. Design of formwork, shoring, re-shoring, temporary bracing etc. To WorkSafe BC regulations and CSA-S269 by registered B.C. professional engineer. Submit sealed temporary works drawings to EOR for review and approval. Do not pour concrete until formwork, shoring and temporary bracing has been inspected and approved by the responsible engineer.
10. Minimum concrete strength for stripping formwork to be 17MPa as determined by field curing cylinders or other approved method.

WOOD FRAMING:

1. All work to conform to CSA O86-24, Division B - Part 9 of the BCBC 2024, The Engineering Guide For Wood Framed Construction and as shown on the structural drawings. The more stringent requirements shall govern.
2. Lumber grading to NLGA standard grading rules for Canadian lumber as follows U.N.O:

MEMBER/ELEMENT	SPECIES	GRADE	STANDARD	COMMENTS
Sill Plates	D.FIR-L	No. 1/2 or Better	CSA 086	Kiln dried or approved equal
Timber Plates	S-P-F	No. 1/2 or Better	CSA 086	Kiln dried or approved equal
Timber Studs	S-P-F	No. 1/2 or Better	CSA 086	Kiln dried or approved equal
Built-Up Columns	S-P-F	No. 1/2 or Better	CSA 086	Kiln dried or approved equal
Joists / Rafters	S-P-F	No. 1/2 or Better	CSA 086	Kiln dried or approved equal
Solid Timber Columns	D.FIR-L	No. 2 or Better	CSA 086	Kiln dried or approved equal
Solid Timber Beams	D.FIR-L	No. 1 or Better	CSA 086	Kiln dried or approved equal
Built-Up Beams	S-P-F	No. 1/2 or Better	CSA 086	Kiln dried or approved equal. Full span length laminations. Do not splice unless approved by IKON
Wall Sheathing	DFP	SEL/SHG	CSA-O325 & 0121	Refer to shear wall schedule
Roof Sheathing	DFP	SEL/SHG	CSA-O325 & 0121	Refer to plans
Floor Sheathing	DFP	SEL/SHG	CSA-O325 & 0121	Refer to plans. Span rating to be confirmed by IKON
	OSB	48/24	CSA-O325 & 0437	

Notes: a. Refer to Structural Composite Lumber for SCL.

3. General timber framing as per below U.N.O on structural drawings:
   a. Moisture: Use Ethafoam gasket between all wood and concrete.
   b. Exposed Timber: Use pressure treated lumber for all exposed framing with compatible connection hardware.
   c. Top plates stagger splice location and lap minimum 1200mm (48"), 3 rows of 2 1/2" common nails @ 150 (6") O.C. unless noted otherwise.
   d. Built-Up Beams: Built-up beams to be top loaded only. Fasten each lamination together with min 3" common nails through last piece as follows:

MEMBER LAMINATION SCHEDULE			
BUILT UP BEAMS			
MEMBER	FASTENERS	PATTERN	NOTES
2x8	0.148" x 3" Nails	(3) ROWS @ 12" o.c.	Top-Load Built-Up beams only
2x10	0.148" x 3" Nails	(4) ROWS @ 12" o.c.	
2x12	0.148" x 3" Nails	(5) ROWS @ 12" o.c.	
(2) - 1-3/4"	SDW22338	5-1/2" = (2) ROWS @ 16" o.c. 7-1/4" = (3) ROWS @ 16" o.c.	
(3) - 1-3/4"	SDW22500	9-1/2" = (3) ROWS @ 12" o.c. 11 7/8" = (4) ROWS @ 12" o.c.	
(4) - 1-3/4	SDW22634	14" = (5) ROWS @ 12" o.c. 16" = (6) ROWS @ 12" o.c.	
BUILT-UP COLUMNS			
2x4	0.148" x 3" Nails	(2) ROWS @ 8" o.c.	Stagger nail laminations in each ply
2x6	0.148" x 3" Nails	(2) ROWS @ 6" o.c.	
2x8	0.148" x 3" Nails	(3) ROWS @ 6" o.c.	
2x10	0.148" x 3" Nails	(4) ROWS @ 6" o.c.	
2x12	0.148" x 3" Nails	(4) ROWS @ 6" o.c.	

   e. Built-Up Columns: Install built-up columns continuous to foundation U.N.O on structural drawings for all beams/headers/girder truss as noted on plan.
   f. Install end grain squash blocks or SCL blocking through floor/roof cassettes aligned with all posts and concentrated loads within walls continuous to foundations below.
   g. Secure all free standing posts and built up columns (not within walls) with applicable cap and base hardware as specified.
   h. Install jack, or bearing studs, as shown on plan and minimum 2ply jack stud under all headers unless noted otherwise. Install (1) full height king stud each side of dropped headers unless noted otherwise on plan. Install (2) full height king studs each side of openings in exterior walls greater than 6'-0"unless noted otherwise on plan.

   i. Floor Sheathing As Per Plan U.N.O.
      With No Concrete Topping: Min . 23/32" T&G OSB or 3/4" T&G DFP
      With Concrete Topping: Min . 23/32" OSB or 3/4" DFP
   j. Roof Sheathing As Per Plan U.N.O.
      Flat Roofs: Min 3/4" T&G DFP
      Sloping Roofs: Min 5/8" DFP
   k. Wall Sheathing As Per Shear Wall Schedule

4. Construct all load bearing and shear walls with two continuous top plates spliced as per connection detail. Strap all breaks in and penetrations through top plates as per connection detail or as per IKON's direction.
5. Continuous sill and bottom plates to bearing on level and even surface and connected as per typical details. Anchor sill plates to concrete foundations with minimum 5/8" x 8" cast-in or post installed anchor bolts unless noted otherwise. Refer shear wall schedule for shear wall bottom plate connections.
6. All beam hangers to be Simpson Strong-Tie or approved equal. All hangers and fasteners to pressure treated lumber to be stainless steel or double hot dipped galvanized as per Simpson Strong-Tie requirements.
7. All headers to be minimum (2) – 2x10 unless noted otherwise. Install dropped headers to underside of wall plates when possible.
8. All materials shall be stored level onside and shall be raised off the ground, stacked using separating spaces and covered with a waterproof material. No material shall have a moisture content higher than 19% at the time of installation.
9. Nailing patterns, hold-downs, straps, and sheathing details shown on the drawings are minimum requirements and shall not be reduced. Shear wall and diaphragm sheathing type, thickness, and fastener spacing shall match the drawings; substitutions require approval by Ikon Engineers.
10. All field alterations of load-bearing or lateral-force-resisting elements (removal of studs, openings in shear walls, breaks in top plates etc.) Require written approval by Ikon Engineers.
11. General floor and roof supporting members shall be designed in conformance with the following deflection requirements. Operable glazing, low tolerance elements and special equipment specifications to be provided to IKON review prior to construction.

DEFLECTION CRITERIA			
	SUSPENDED CEILING	FLEXIBLE SOFFIT OR NO CEILING	FIXED OR RIGID CEILING (GWB)
FLOORS	ΔLive ≤ Span/480	ΔLive ≤ Span/480	ΔLive ≤ Span/480
	ΔTotal ≤ Span/240	ΔTotal ≤ Span/240	ΔTotal ≤ Span/240
ROOFS	ΔLive ≤ Span/360	ΔLive ≤ Span/240	ΔLive ≤ Span/360
	ΔTotal ≤ Span/180	ΔTotal ≤ Span/240	

COPYRIGHT

INTELLECTUAL PROPERTY RIGHTS IN ANY INFORMATION OR DATA SUPPLIED WITHIN THIS DRAWING ARE OWNED BY OR LICENSED TO IKON ENGINEERS CANADA LTD. IT IS PROHIBITED TO COPY, REPRODUCE, STORE, PUBLISH OR COMMERCIALISE INFORMATION CONTAINED WITHIN THIS DRAWING WITHOUT PRIOR WRITTEN APPROVAL FROM IKON ENGINEERS CANADA LTD.
© 2025 IKON ENGINEERS CANADA LTD

NO.	Date	Description
3	10 Nov 2026	Issued For Construction
2	14 Oct 2026	Issued For Building Permit
1	18 Sep 2026	Issued For Coordination

REVISION

CONSULTANT

IKON ENGINEERS
IKON ENGINEERS CANADA LTD.
9 - 1005 ALPHA LAKE ROAD,
WHISTLER B.C. V8E 0H5
T: +1 (604) 283-5208
E: hello@ikonengineers.com
FORMERLY TWIN PEAKS ENGINEERING LTD.

ENGINEERS & GEOSCIENTISTS
BRITISH COLUMBIA
PERMIT TO PRACTICE #:
1001438

SEAL

PROJECT TITLE

Davis Modular Brackendale

, Squamish, B.C.

SHEET TITLE

Structural Notes

JOB NO.: 26086 - SP

DWN: AB

SCALE: As indicated

DWG NO. S1.1

REV. 3

PUBLIC REFERENCE COPY / OWNER DETAILS REMOVED

STRUCTURAL COMPOSITE LUMBER (SCL):

1. Prefabricated wood joists shall be TJI, as manufactured by Weyerhaeuser in accordance with the following:
   a. Design and fabricated to VSS 9419 and CSA O86 for dimensions and loadings shown on the drawings.
   b. For residential/commercial buildings, design joists for a maximum live load deflection of l/480 and span length to meet NBCC vibration criteria or TJI pro rating of 45.
   c. For multi-storey buildings, provide web stiffeners and solid blocking to transfer loads between levels. indicate on shop drawings.
   d. Use single 1 3/4" LSL rim joist at all perimeter and double party walls. Use double rim joists where joists run parallel to wall in conjunction with perpendicular blocking as per typical details.

2. Prefabricated wood beams shall be Parallam PSL, Timberstrand LSL or Microllam LVL as manufactured by Weyerhaeuser in accordance with the following:
   a. Provide the following grades unless specified on the drawings:
      PSL BEAMS 2.2E PARALLAM PSL
      PSL COLUMNS 1.8E PARALLAM PSL
      LSL 1.55E TIMBERSTRAND LSL
      LVL 2.0E MICROLLAM LVL

3. SCL and prefabricated I-joists shall be manufactured in a trus-joist plant under the supervision of a certified third party inspection agency.
4. Members shall be stored vertically and protected from the weather and moisture prior to and during installation as per manufacturer's requirements.
5. Holes, cuts or notches not previously approved by the manufacturer's engineer shall not be made. Temporary construction loads beyond limits are not permitted.
6. Install SCL and prefabricated I-joists in accordance with the shop drawings and manufacturers specifications.
7. Two (2) sets of shop drawings shall be submitted to the structural engineer for all prefabricated SCL and I-joists, signed and sealed by a professional engineer registered in British Columbia. The following details are required as a minimum:
   a. Detailed layout showing location, bearing conditions and design loads.
   b. Connection details showing design loads and installation details.
   c. Quality of all member types, connections and accessories.
   d. Schedule S-B and S-C (specialty engineer assurance of professional design and field review) for design and installation.

8. Alternate products will only be allowed with written approval of the structural engineer.

GLUE-LAMINATED TIMBER:

1. Manufacture glue-laminated members to CSA O86 in accordance with 0122 by manufacturer qualified to CSA 0177.
2. Camber beams for full dead load deflection or minimum of L/360 where noted on plans.
3. Glue-Laminated timbers shall be Douglas Fir-Larch unless noted otherwise on the drawings with the following grades:

Glulam Beams	Simple Span Beams	24F-E
	Continuous Span Beams	24F-EX
	Appearance	QUALITY
Glulam Columns	Stress Grade	16C-E
	Appearance	QUALITY

4. Steel connections shall conform to the following:
   a. Typical connections are indicated on the structural drawings. Modification of these may be required to suit various beam/column sizes and conditions.
   b. The fabricator shall design all connections to 100% of the factored shear strength of the glue-laminated timber.
   c. fabrication and supply of all materials and plates for connections of glue-laminated timbers to be by glulam supplier, unless noted otherwise on the drawings.
   d. All steel of connections shall comply with the structural steel notes on this sheet and as per below.

Exterior	Hot-Dipped Galvanized
	Zinc Plated Bolts, Nuts, Washers
Interior	One Coat Of Primer to CISC/CPMA 1-73A

5. Members shall be stored and protected from the weather and moisture prior to and during installation.
6. Exposed end grains to be sealed with two (2) coats of end sealer, side grain to be sealed with one (1) coat of edge sealer. End grains to have shop laminated mitered end cap.
7. The following submittals are required for review prior to fabrication and delivery:
   a. Provide three (3) sets of shop drawings to the structural engineer for all members indicating design loads.
   b. Provide three (3) sets of shop drawings of proposed connections indicating design loads and sealed by a professional engineer registered in British Columbia.

CROSS-LAMINATED TIMBER (CLT):

1. Design and fabrication of cross-laminated timber (CLT) panels shall be in accordance with APA PRG 320-2025 - "Standard For Performance-Rated Cross-Laminated Timber", CSA O86-24 - "Engineering Design In Wood", and British Columbia Building Code 2024. If European CLT is used, manufacturer shall be certified with a European Technical Assessment (ETA).
2. Submit sealed shop drawings with the following information to the IKON for review and approval prior to fabrication:
   a. Show layout, dimensions, and elevations of each panel.
   b. Clearly indicate species, stress grade, service grade, appearance grade, and shop applied finishes.
   c. Include details of cuts, openings, holes, cambers, fastenings and connection hardware.
   d. Indicate all weather protective measuring during storage and handling.

3. Submit erection drawings indicating member locations, elevations, and spacing. Label each member with a piece number or alternate unique mark.
4. Drawings and components designed by the manufacturer shall be signed and sealed by the professional engineer.
5. The professional engineer sealing the fabricator's shop drawings is also responsible for all field review of their work. The engineer shall provide signed and sealed letters of assurance (Schedule S-B and S-C) to the engineer or record confirming the work has been completed in accordance with the final reviewed shop drawings and all structural requirements.
6. Erect panels in accordance with final reviewed shop drawings, level and plumb with uniform, close-fitting joints. Fit panels without trimming, cutting or other modifications unless approved in writing by the EOR. Site cutting or hole boring of panels, other than those shown on the approved shop drawings, is not permitted without written consent of the EOR. Coat all field-cuts with minimum two coats of clear sealer.
7. Provide temporary shoring, guys, braces and other supports during erection to keep panels secure and in alignment against wind loads, seismic loads, temporary construction loads, and loads equal to in intensity to design loads. Any failure to make proper and adequate provisions for stresses during erection shall be solely the responsibility of the installer.
8. Provide moisture barrier at all locations where panels abut concrete or masonry construction.
9. CLT panels shall be wrapped with a weatherproof, lightproof, stain free material. Protect panel corners with wood dunnage or blocking during delivery. Store panels off the ground and separated with timber stripping. Provide slit in membrane material covers during storage at site. Maintain protection of panels during construction.
10. Refer to architectural drawings for specifications regarding finishes, acoustic performance and envelope requirements.
11. CLT panel chord and collector straps to be designed and confirmed in accordance with the final fabrication drawings and panel layout.

PRE-ENGINEERED TRUSSES:

1. Design and fabricate pre-engineered trusses to conform to the 2024 British Columbia Building Code and CSA-O86.24.
2. Submit shop drawings, erection drawings, and Model Schedule S-B sealed by a professional engineer registered in British Columbia for review prior to fabrication. Erection drawings must include all temporary and permanent bridging.
3. Manufacturer to design trusses for design loads as specified on drawing S1 - structural notes.
4. Maximum truss load deflections:
   Roof Snow Load: L/360
   Roof Total Load: L/240
   Floor Live Load: L/480
5. Multi-ply girder trusses shall be bolted or nail laminated as per truss engineer.
6. Truss supplier to design and supply connections of trusses to the building to withstand all gravity and uplift loads. Design uplift connections as per design loads shown on the drawings and min. 20.9psf net factored uplift.
7. Installation of pre-engineered trusses shall be inspected and approved by a professional engineer registered in British Columbia from an agency approved by the structural engineer of record. Submit Model S-C schedule to the structural engineer of record as required.
8. Provide shear trusses and shear truss frame blocking to withstand the nominated lateral loads where indicated on the structural drawings.
9. Do not cut, notch, drill, or alter trusses in the field without written approval from the truss engineer and IKON.

CONNECTORS & FASTENERS:

1. All connectors, fasteners, anchors, and hardware shall conform to the latest editions of CSA B111 (Wire Nails, Spikes and Staples), ASTM F1667 (*Standard Specification for Driven Fasteners),* CSA S16 (Steel Structures), CSA O86 (Wood Design), and manufacturer specifications. Use only products with published factored resistances for Limit States Design.
2. Material Requirements

TYPE	GRADE	STANDARD	NOTES
General Framing Connectors and Hardware	**Simpson Strong-Tie, or approved similar, installed as per manufacturer's specifications.**		
Nails	Common Wire	CSA B111 & ASTM F1667	Hot dipped or mechanically galvanized for exterior or use in PT lumber as per ASTM A153. IKON to review all other coating and protection systems prior to installation.
Bolts	ASTM A307-A	ASME B18.2.1	
Lag Screws	ASTM A307-A	ASME B18.2.1	
Structural Wood Screws	Refer Details	CSA O86 & ASME B18.6.1	
Anchor Bolts	ASTM A307-A	ASME B18.2.1	
Anchor Rods (Hold Downs)	ASTM F1554 Gr 36	ASTM F1554	

3. Install per manufacturer instructions and published load tables; do not overdrive fasteners. Verify edge/cover distances and spacing per CSA standards and connector specifications. Submit shop drawings showing connector schedules, fastener types/sizes, and capacities for review prior to installation. Provide sample nails, screws and anchors for IKON during site inspections.
4. No substitutions without prior written approval from IKON. All proprietary connectors must have current evaluation reports (e.g., ICC-ES) confirming compliance with BC Building Code.
5. Protect galvanized coatings from corrosion during construction; repair damaged areas per ASTM A780. Stainless steel hardware required in contact with treated wood or harsh environments.
6. Nailing installed in accordance with Part 9 BCBC2024 and CSA O86 unless noted otherwise. All nails to be common round steel wire in accordance with the following shank diameter and length specifications.

SHANK DIAMETER mm [in]	LENGTH mm [in]	PENNY WEIGHT
2.8 [0.113"]	50 [2"]	6d
3.3 [0.131"]	64 [2 1/2"]	8d
3.7 [0.148"]	76 [3"]	10d
4.1 [0.161"]	89 [3 1/2"]	16d
4.8 [0.192"]	101 4"]	20d
5.2 [0.207"]	114 [4 1/2"]	30d
5.7 [0.225"]	127 [5"}	40d
6.6 [0.262"]	152 [6"]	60d

7. Power driven nails of the same shank diameter and length are acceptable for general framing. Review manufacturer's specifications for power driven nails being installed in hanger, straps and connection hardware.
8. Nails to be installed with underside of nail head flush with surface +/- 1/16". Proud or overdriven nails to be rectified prior to concealment. Sample or withdrawn nails to be available during IKON inspection.

STRUCTURAL STEEL:

1. Fabricate and erect structural steel to CSA-S16:24.
2. Structural steel shall conform to CSA G40.20 AND G40.21 with the following grades unless noted otherwise on plan:
   a. Rolled shapes (wide-flange, channels, angles) Grade 350W
   b. HSS shapes (square, rectangular, round) Grade 350W (Class C)
   c. Plates and bars Grade 300W
   d. Bolts (Steel to Steel) ASTM A325 / A325M
   e. Anchor bolts ASTM A307
   f. Bolts – Wood connection (interior) ASTM A307 (Zinc Plated)
   g. Bolts – Wood connection (exterior) ASTM A307 (Galvanized)

3. All welding shall conform to CSA W59 and performed by welders and fabricators certified under CSA W47.1 (Div.1 or 2). Welds shall be minimum E49XX SMAW unless noted otherwise.
4. All structural welds shall be 1/4" (6mm) fillet unless noted otherwise.
5. Field welds shall conform to approved shop drawings. Touch up all field welds with primer after slag has been removed.
6. Welding of Nelson studs (headed studs) to structural steel shall meet the manufacturers specifications and shall be tested by a qualified independent testing agency.
7. Unless otherwise noted, apply a minimum of one shop applied coat of primer to all structural steel to CISC/CPMA 1-73A. For exterior exposures, use primer containing zinc-chromate Type 1, conforming to CGSB 1-GP-40D.
8. All structural steel work directly exposed to weather shall be hot dipped galvanized unless otherwise noted on the Structural or Architectural drawings. Hot dip galvanizing to be completed in accordance with the requirements of CAN/CSA G164.
9. Repair damage to hot dipped galvanized coating with a minimum of two (2) coats of ZRC Galvilite Galvanizing Repair or alternate paint conforming to SSPC Paint Specification 20 – Zinc-Rich Coating: Type II – Organic with equal to or greater than 95% zinc dust by weight present in the dried film.
10. Design of structural steel connections by the steel fabricator's Specialty Engineer for the specifications listed below unless noted on drawings:
    a. Design beam end factored shear for 60% of the $V_{r,min}$ provided by the Beam Selection Table given in the CISC Handbook of Steel Construction.
    b. Provide minimum 3/8" (10mm) thick full height web stiffeners at bearing points, brace points and beam to girder connections.
    c. Provide minimum two (2) 3/4" bolts per connection.
    d. Design all column-to-beam and column-to-girder connections for a horizontal stability force in all directions equal to 0.02 x design column axial load acting simultaneously with all other loads.

11. The contractor is responsible for the coordination of all steel member connections with the steel fabricator unless complete connection design (including plate sizes, weld and bolt arrangements) is provided in the structural drawings by IKON. Steel-to-steel connections shall be designed by the retained Specialty Engineer.
12. Shop drawings and supporting calculations for the components designed by the steel fabricator shall be signed and sealed by the Specialty Engineer. The Specialty Engineer sealing the fabricator's shop drawings is also responsible for the field review of the connections and shall provide signed and sealed letters of assurance to IKON confirming the work has been completed in accordance with the approved shop drawings and all structural requirements. Letters of assurance shall be in the form of Schedules S-B ad S-C. The fabricator shall provide shop drawings signed and sealed by the Specialty Engineer indicating design capacity of all steel-to-steel connections to IKON.
13. Protection of dissimilar metals from galvanic corrosion is the responsibility of the Specialty Engineer.
14. Provide 3/8" (10mm) cap plates at open ends of HSS members complete with seal weld all around. Provide minimum Ø 3/4" hole at base of HSS columns for drainage.
15. Welding of reinforcement bars to embed plates or other structural steel elements is only permitted with weldable deformed bars with the following fillet welds all around:
    - 10M – 1/4" (6mm)
    - 15M – 3/8" (10mm)
    - 20M – 1/2" (12mm)
    - 25M – 5/8" (16mm)

16. Headed stud anchors welded to embed plates to be arc stud welded, or fillet welded. Fillet weld all around as per below:
    - Ø 3/8" – 1/4" (6mm)
    - Ø 1/2" – 5/16" (8mm)
    - Ø 5/8" – 3/8" (10mm)
    - Ø 3/4" – 1/2" (12mm)
    - Ø 1" – 5/8" (16mm)

17. Grout fill all voids on underside of base plates and bearing plates in contact with concrete or masonry with cementitious non-shrink or epoxy grout with a minimum 7 day strength of 35MPa unless noted otherwise on structural drawings. Maximum allowable grout pad thickness of 1" (25mm) unless approved by IKON in writing. Follow manufacturer's specifications for mixing and placement.
18. If the structural steel member size specified on the structural drawings is not available, the contractor shall notify the Engineer immediately and allow for the next available size up.

STRUCTURAL STEEL INSPECTIONS:

1. The following inspections of structural steel and steel decking are required:
   a. By IKON for general conformance with the structural design concept.
   b. By the Specialty Engineer for all steel-to-steel connections as required to sign and seal the Letters of Assurance (Schedules S-B and S-C).
   c. By the appointed Third-Party Inspection Agency paid by the Owner for shop and field inspection scope defined below in Section 2. The Third-Party Inspection Agency and Inspector shall be certified to CSA W178.1 and W178.2 respectively.
   d. By the Third-Party Inspection Agency paid by the Contractor for inspection of field repairs to members or connections.

2. Inspection scope for Third-Party Inspection Agency:
   a. Inspect by Non-Destructive Testing (NDT) methods (Ultrasonic Testing) all members containing shop or field completed full penetration welds. Extent of NDT for partial and full penetration groove welds or tranverse butt welds:
      1. 50% of full penetration welds for seismic braces and brace-frame connections
      2. 100% of full penetration welds for seismic moment-frame connections
      3. 100% in butt joints
   b. Inspect by Non-Destructive Testing (NDT) methods (Magnetic Particle) all members containing shop or field completed fillet welds. Extent of NDT for fillet welds:
      1. 20% of fillet welds for seismic moment-frame connections
      2. 20% for fillet welds for seismic braces and brace-frame connections
      3. 5% for all other fillet welds not listed above
   c. Perform 100% visual inspection of all field welds. Where visual inspection of field welds are inadequate or inconclusive, the welds shall either be reworked or examined by a Non-Destructive Method listed above.
   d. Shop test Nelson studs or threaded bolt studs applied to beams or plates in the fabricators shop. Field testing of field-installed Nelson studs or threaded studs to be completed in accordance with CSA W59.
   e. The results of the Third-Party Inspection shall be provided to IKON and the Specialty Engineer a within 2 weeks of completing the inspections.

TEMPORARY WORKS AND SHORING:

1. These engineering drawings are to be read in conjunction with project specifications and other consultants' drawings on the project.
2. These engineering drawings have been prepared from information available at the time of issue. As this information may be the subject of change prior to or during construction the contractor is to advise the engineer where discrepancies occur.
3. These drawings shall not be used for final set out of the project unless specifically stated.
4. Where structural certification is required, inspections are to be performed by a duly appointed inspector from ikon engineers ltd. The inspector is to be given a minimum of 48 hours' notice that an inspection is required or provided with a construction program for the works.
5. Prior to the commencement of works the contractor is to identify all existing service. Any damage to existing services is to be rectified at the contractor's expense.
6. The contractor shall check or obtain all dimensions relevant to setting out of the site works, and the provision of any temporary bracing, including design, in accordance with the specification.
7. During construction the contractor shall be responsible for maintaining the stability of the works and ensure no part is overstressed.
8. All works are to be installed in accordance with manufactures recommendations
9. Design is based on resistance of wind loading (1:10) during erection only. No allowance has been made to resist accidental impact of construction materials during installation.
10. The contractor is responsible for all site safety and exclusion zones during installation in order to prevent injury to personal or damage to temporary shoring works.

WOOD BASED BEAM - KEY		
MARK	**NUMBER & SIZE**	**MATERIAL GRADE U.N.O**
Dimensional Lumber Built-Up Beams		
(#)-B bxd	*(# Plies) - Beam - Width (b) x Depth (d)*	*SPF No. 1/2*
(2)-B210	2PLY 2x10 - (2 - 38 x 235)	SPF No. 1/2
Dimensional Lumber Beams		
B bxd	*Beam - Width (b) x Depth (d)*	*D.Fir-L No. 1*
B612	6x10 - (140 x 286)	D.Fir-L No. 1
Structural Composite Lumber (SCL) Beams		
PSLbd	*Width (b) x Depth (d)*	*Parallam 2.2 E*
PSL312	3 1/2" x 11 7/8" - (89 x 302)	Parallam 2.2 E
Structural Composite Lumber (SCL) Built-Up Beams		
(#)-LSLbd	*(# Plies) Width (b) x Depth (d)*	*Timberstrand LSL 1.55E*
(2) - LSL210	(2) PLY - 1 3/4" x 9 1/2" - (45 x 241)	Timberstrand LSL 1.55E
(#)-LVLbd	*(# Plies) Width (b) x Depth (d)*	*Microllam LVL 2.0E*
(3)-LVL214	(3) PLY - 1 3/4" x 14" - (45 x 356)	Microllam LVL 2.0E
Glue-Laminated Beams		
GLBbxd	*Width (b) x Depth (d)*	*D.Fir-L 24f-EX*
GLB3.125x12	3 1/8" x 12" GLULAM-EX 24f-EX	D.Fir-L 24f-EX

COPYRIGHT

INTELLECTUAL PROPERTY RIGHTS IN ANY INFORMATION OR DATA SUPPLIED WITHIN THIS DRAWING ARE OWNED BY OR LICENSED TO IKON ENGINEERS CANADA LTD. IT IS PROHIBITED TO COPY, REPRODUCE, STORE, PUBLISH OR COMMERCIALISE INFORMATION CONTAINED WITHIN THIS DRAWING WITHOUT PRIOR WRITTEN APPROVAL FROM IKON ENGINEERS CANADA LTD.
© 2025 IKON ENGINEERS CANADA LTD

NO.	Date	Description
3	10 Nov 2026	Issued For Construction
2	14 Oct 2026	Issued For Building Permit
1	18 Sep 2026	Issued For Coordination

REVISION

CONSULTANT

IKON ENGINEERS
IKON ENGINEERS CANADA LTD.
9 - 1005 ALPHA LAKE ROAD,
WHISTLER B.C. V8E 0H5
T: +1 (604) 283-5208
E: hello@ikonengineers.com
FORMERLY TWIN PEAKS ENGINEERING LTD.

ENGINEERS & GEOSCIENTISTS
BRITISH COLUMBIA
PERMIT TO PRACTICE #:
1001438

SEAL

PROJECT TITLE

Davis Modular Brackendale

, Squamish, B.C.

SHEET TITLE

Structural Notes

JOB NO.: 26086 - SP

DWN: AB

SCALE: 12" = 1'-0"

DWG NO. S1.2

REV. 3

PUBLIC REFERENCE COPY / OWNER DETAILS REMOVED

ISSUED FOR CONSTRUCTION

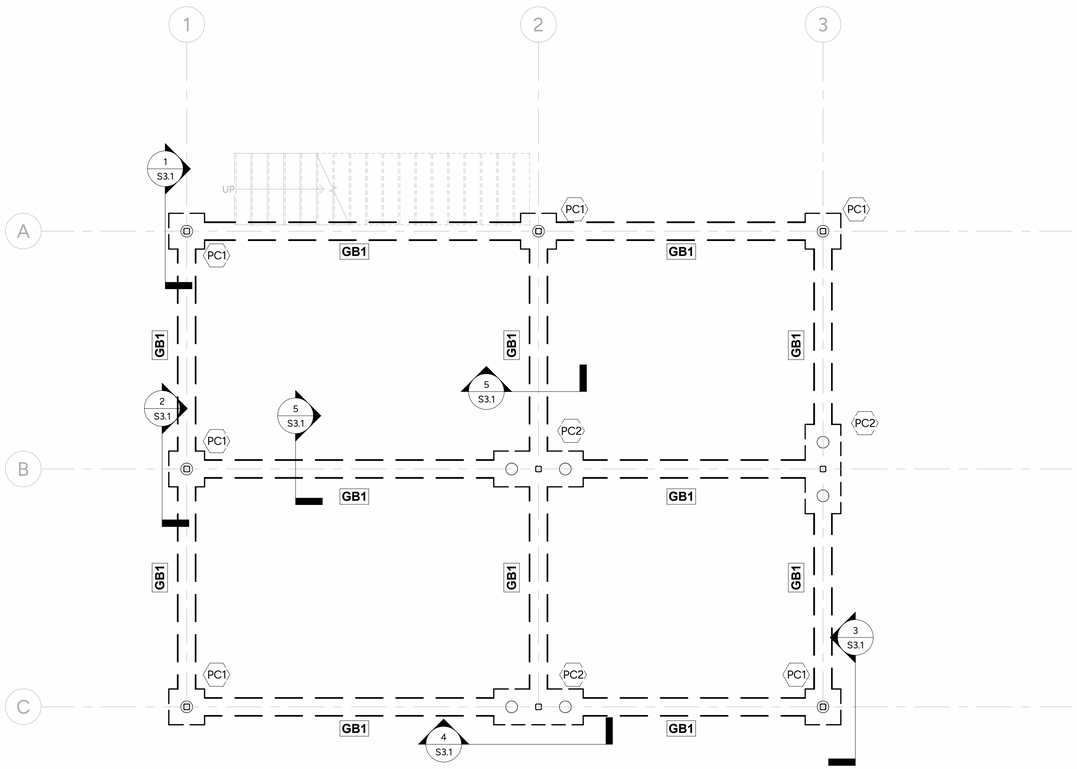

1 FOUNDATION PLAN
1/4" = 1'-0"

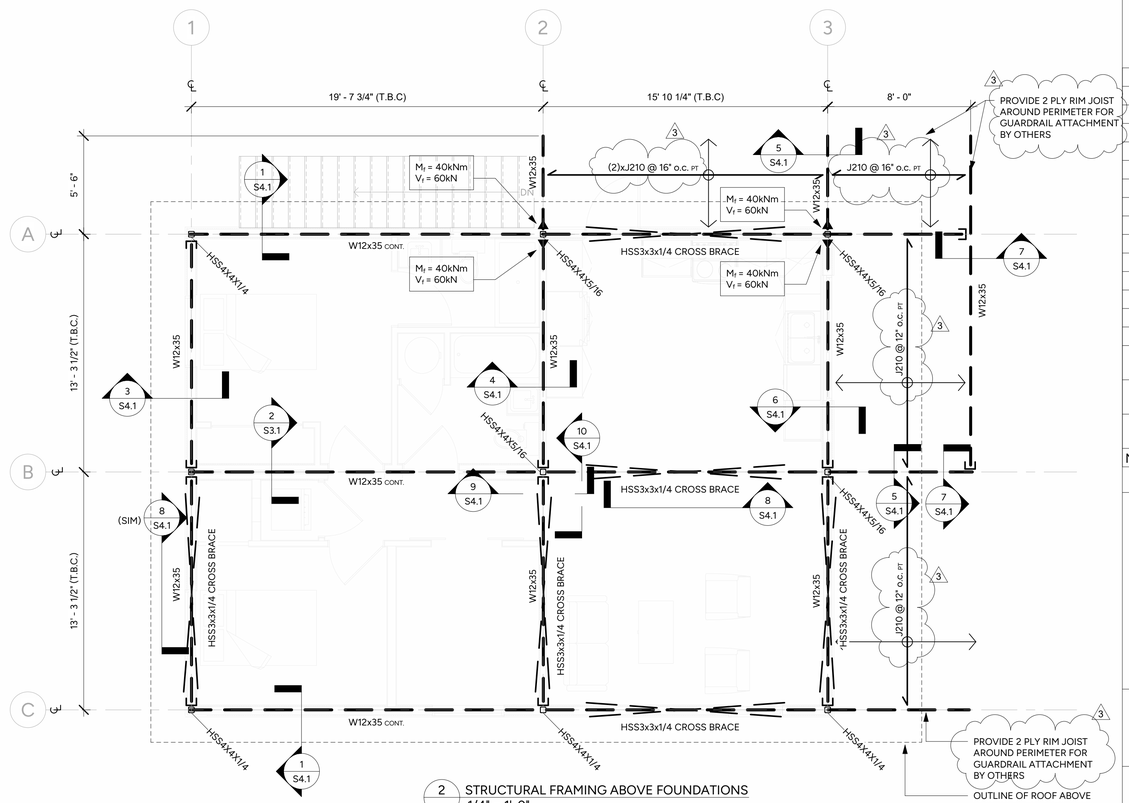

2 STRUCTURAL FRAMING ABOVE FOUNDATIONS
1/4" = 1'-0"

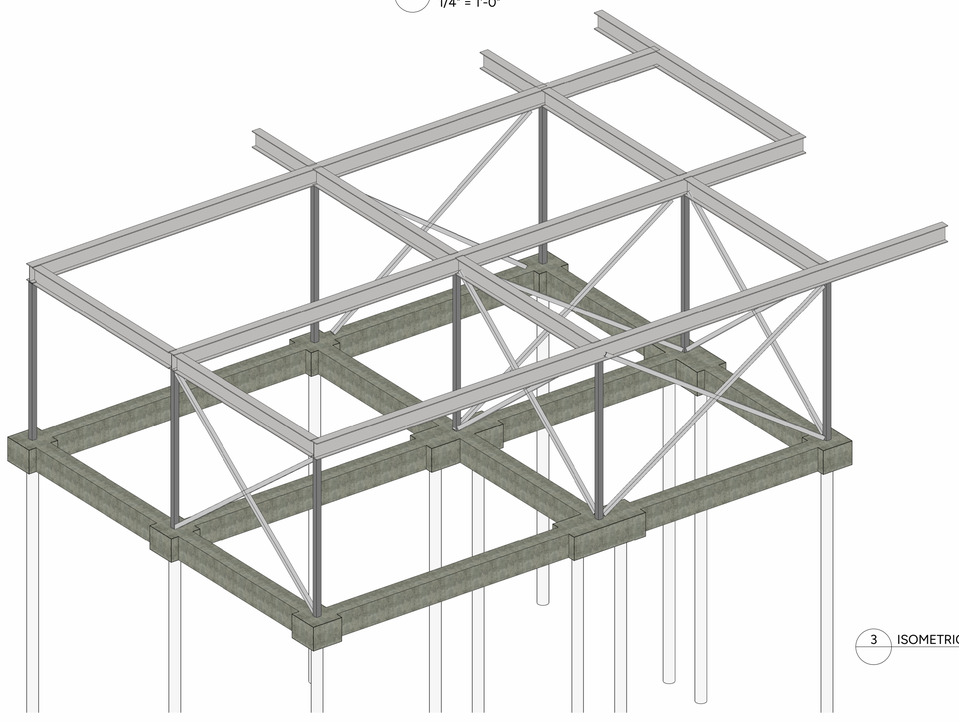

3 ISOMETRIC VIEW

NOTES:
1. MODULAR UNITS DESIGNED AND MANUFACTURED IN ACCORDANCE WITH "CSA A277-16 PROCEDURE FOR CERTIFICATION OF PREFABRICATED BUILDINGS, MODULES, AND PANELS". IKON ENGINEERING CANADA LTD. TAKES NO RESPONSIBILITY FOR THE DESIGN, DOCUMENTATION, CONSTRUCTION OR INSTALLATION OF MODULAR UNITS.
2. MODULAR UNITS ARE TO BE DESIGNED TO THE DESIGN LOADING INDICATED ON SHEET S0 FOR WIND, SEISMIC AND GRAVITY LOADING IN ACCORDANCE WITH BCBC 2024.
3. FOUNDATION LAYOUT HAS BEEN DESIGNED TO SUPPORT STRUCTURAL DESIGN LOADS FOR MODULAR BUILDING UNITS.
4. ALL DIMENSIONS NOTED ON THESE STRUCTURAL PLANS SHALL BE VERIFIED BY MODULAR UNIT MANUFACTURER FOR COMPLIANCE WITH MODULE DESIGN AND DIMENSIONS.

FOUNDATION SCHEDULE

MARK	TYPE	WIDTH	DEPTH	THICKNESS	REINFORCEMENT	NOTES
PC1	PILE CAP	2'-0"	2'-0"	1'-6"	SEE DETAIL	HELICAL PILES SIZE REFER TO SUPPLIER DOCS
PC2	PILE CAP	5'-0"	2'-0"	1'-6"	SEE DETAIL	HELICAL PILES SIZE REFER TO SUPPLIER DOCS

GRADE BEAM SCHEDULE

MARK	SHAPE	WIDTH	DEPTH	TOP BARS	BOTTOM BARS	SHEAR TIES
GB1	RECTANGLE	12"	18"	(3) 15M	(3) 15M	10M @ 32" O.C.

COPYRIGHT

INTELLECTUAL PROPERTY RIGHTS IN ANY INFORMATION OR DATA SUPPLIED WITHIN THIS DRAWING ARE OWNED BY OR LICENSED TO IKON ENGINEERS CANADA LTD. IT IS PROHIBITED TO COPY, REPRODUCE, STORE, PUBLISH OR COMMERCIALISE INFORMATION CONTAINED WITHIN THIS DRAWING WITHOUT PRIOR WRITTEN APPROVAL FROM IKON ENGINEERS CANADA LTD.
© 2025 IKON ENGINEERS CANADA LTD

NO.	Date	Description
3	10 Nov 2026	Issued For Construction
2	14 Oct 2026	Issued For Building Permit
1	18 Sep 2026	Issued For Coordination

REVISION

CONSULTANT

IKON ENGINEERS
IKON ENGINEERS CANADA LTD.
9 - 1005 ALPHA LAKE ROAD,
WHISTLER B.C. V8E 0H5
T: +1 (604) 283-5208
E: hello@ikonengineers.com
FORMERLY TWIN PEAKS ENGINEERING LTD.

ENGINEERS & GEOSCIENTISTS
BRITISH COLUMBIA
PERMIT TO PRACTICE #:
1001438

SEAL

PROJECT TITLE

Davis Modular Brackendale

, Squamish, B.C.

SHEET TITLE

Foundation Plan

JOB NO.: 26086 - SP

DWN: AB

SCALE: As indicated

DWG NO. S2.1

REV. 3

PUBLIC REFERENCE COPY / OWNER DETAILS REMOVED

Table 1. Ultimate Limit State Loads

Pile Cap Grid Line	Design Case	Fx (kN)	Fy (kN)	Fz (kN)	Resultant H (kN)
1A	Max Downward	0.1	84.7	-0.1	0.1
1A	Max Uplift				
1A	Max |Fx|	-11.3	47.7	-0.0	11.3
1A	Max |Fz|	0.1	47.8	-10.6	10.6
2A	Max Downward	-3.1	194.7	0.4	3.2
2A	Max Uplift				
2A	Max |Fx|	-8.7	110.7	0.1	8.7
2A	Max |Fz|	-1.4	104.2	-16.8	16.9
3A	Max Downward	3.4	212.0	-0.0	3.4
3A	Max Uplift				
3A	Max |Fx|	-22.0	108.4	0.2	22.0
3A	Max |Fz|	1.2	86.6	-10.1	10.2
1B	Max Downward	0.2	144.9	-2.6	2.6
1B	Max Uplift				
1B	Max |Fx|	-16.1	56.8	-0.7	16.1
1B	Max |Fz|	-0.1	37.1	-19.6	19.6
2B	Max Downward	-3.1	256.8	-3.6	4.8
2B	Max Uplift				
2B	Max |Fx|	-35.9	69.9	-1.3	36.0
2B	Max |Fz|	-1.2	65.7	-32.8	32.8
3B	Max Downward	2.9	189.4	-3.0	4.2
3B	Max Uplift				
3B	Max |Fx|	-34.6	127.8	-1.2	34.6
3B	Max |Fz|	1.3	41.8	-28.9	28.9
1C	Max Downward	-0.1	92.7	2.7	2.7
1C	Max Uplift				
1C	Max |Fx|	-11.5	48.1	1.1	11.6
1C	Max |Fz|	0.2	75.7	-17.4	17.4
2C	Max Downward	-2.4	168.5	3.3	4.1
2C	Max Uplift				
2C	Max |Fx|	-19.9	53.4	1.3	19.9
2C	Max |Fz|	-1.0	124.9	-28.0	28.0
3C	Max Downward	2.5	125.8	3.0	3.9
3C	Max Uplift				
3C	Max |Fx|	-18.1	80.2	1.1	18.1
3C	Max |Fz|	0.9	101.5	-23.8	23.8

Table 2. Serviceability Limit State Loads

Pile Cap Grid Line	Design Case	Fx (kN)	Fy (kN)	Fz (kN)	Resultant H (kN)
1A	Max Downward	0.1	64.4	-0.1	0.1
1A	Max Uplift				
1A	Max |Fx|	1.6	49.4	-0.0	1.6
1A	Max |Fz|	0.1	36.4	-1.5	1.5
2A	Max Downward	-2.3	145.3	0.2	2.3
2A	Max Uplift				
2A	Max |Fx|	-4.4	86.5	0.1	4.4
2A	Max |Fz|	-1.3	91.0	3.0	3.3
3A	Max Downward	2.2	145.8	-0.0	2.2
3A	Max Uplift				
3A	Max |Fx|	4.5	93.1	-0.0	4.5
3A	Max |Fz|	1.0	74.0	2.6	2.8
1B	Max Downward	0.1	100.1	-1.7	1.7
1B	Max Uplift				
1B	Max |Fx|	2.2	71.5	-1.0	2.4
1B	Max |Fz|	-0.1	57.2	-3.3	3.3
2B	Max Downward	-2.0	169.6	-2.3	3.1
2B	Max Uplift				
2B	Max |Fx|	-5.4	90.7	-1.2	5.5
2B	Max |Fz|	-1.0	87.6	-6.4	6.4
3B	Max Downward	1.9	129.4	-2.0	2.8
3B	Max Uplift				
3B	Max |Fx|	5.6	90.0	-1.3	5.8
3B	Max |Fz|	1.0	72.5	-5.0	5.1
1C	Max Downward	-0.1	65.0	1.8	1.8
1C	Max Uplift				
1C	Max |Fx|	-1.9	36.7	0.7	2.0
1C	Max |Fz|	-0.1	45.2	3.5	3.5
2C	Max Downward	-1.6	115.0	2.1	2.7
2C	Max Uplift				
2C	Max |Fx|	-3.5	69.0	1.0	3.7
2C	Max |Fz|	-1.0	74.8	6.2	6.2
3C	Max Downward	1.6	87.3	2.0	2.6
3C	Max Uplift				
3C	Max |Fx|	3.8	59.9	1.3	4.0
3C	Max |Fz|	1.0	56.9	4.7	4.8

1. Governing load combinations with concurrent reactions (for combined axial + lateral pile checks)
2. No uplift in governing load combinations

ISSUED FOR CONSTRUCTION

COPYRIGHT

INTELLECTUAL PROPERTY RIGHTS IN ANY INFORMATION OR DATA SUPPLIED WITHIN THIS DRAWING ARE OWNED BY OR LICENSED TO IKON ENGINEERS CANADA LTD. IT IS PROHIBITED TO COPY, REPRODUCE, STORE, PUBLISH OR COMMERCIALISE INFORMATION CONTAINED WITHIN THIS DRAWING WITHOUT PRIOR WRITTEN APPROVAL FROM IKON ENGINEERS CANADA LTD.
© 2025 IKON ENGINEERS CANADA LTD

NO.	Date	Description
3	10 Nov 2026	Issued For Construction
2	14 Oct 2026	Issued For Building Permit
1	18 Sep 2026	Issued For Coordination

REVISION

CONSULTANT

IKON ENGINEERS CANADA LTD.
9 - 1005 ALPHA LAKE ROAD,
WHISTLER B.C. V8E 0H5
T: +1 (604) 283-5208
E: hello@ikonengineers.com
FORMERLY TWIN PEAKS ENGINEERING LTD.

ENGINEERS & GEOSCIENTISTS
BRITISH COLUMBIA
PERMIT TO PRACTICE #:
1001438

SEAL

PROJECT TITLE

Davis Modular Brackendale

, Squamish, B.C.

SHEET TITLE

Pile Cap Loads

JOB NO.: 26086 - SP

DWN: AB

SCALE: 12" = 1'-0"

DWG NO. S2.2

REV. 3

PUBLIC REFERENCE COPY / OWNER DETAILS REMOVED

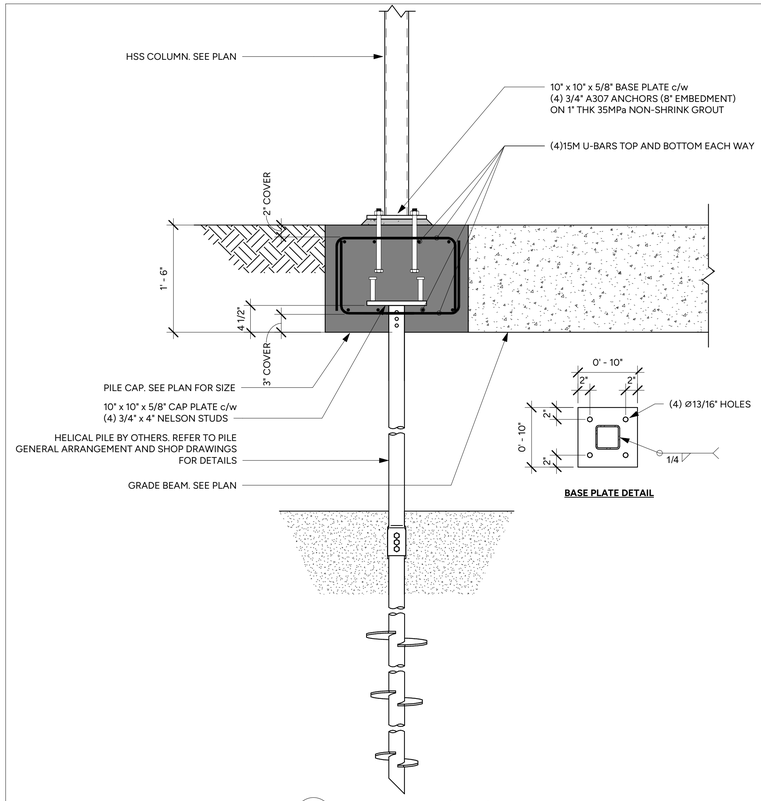

1 S2.1 TYPICAL PILE CAP (1 PILE)
1" = 1'-0"

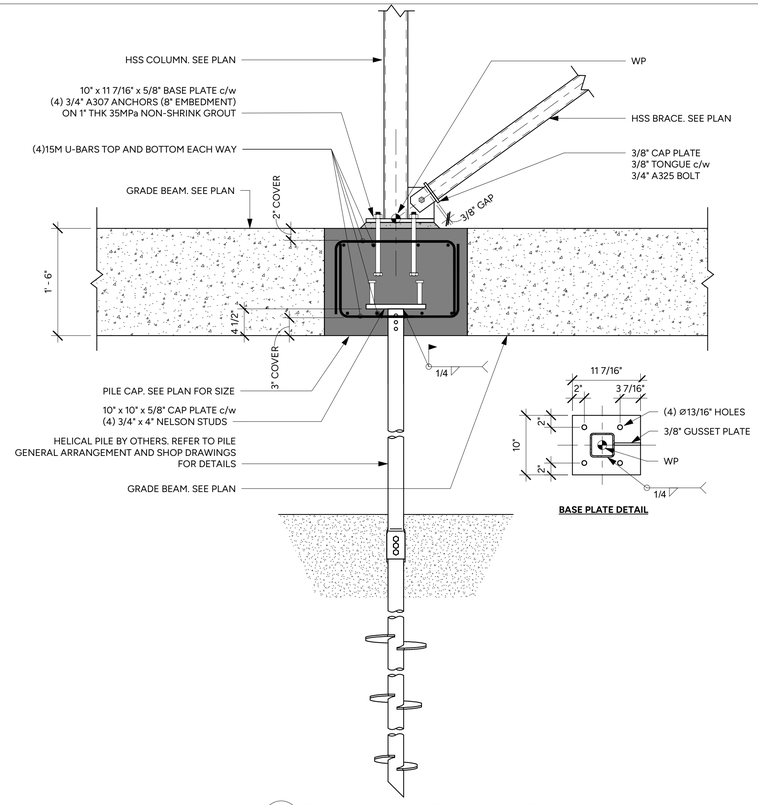

2 S2.1 TYPICAL PILE CAP WITH BRACE (1 PILE)
1" = 1'-0"

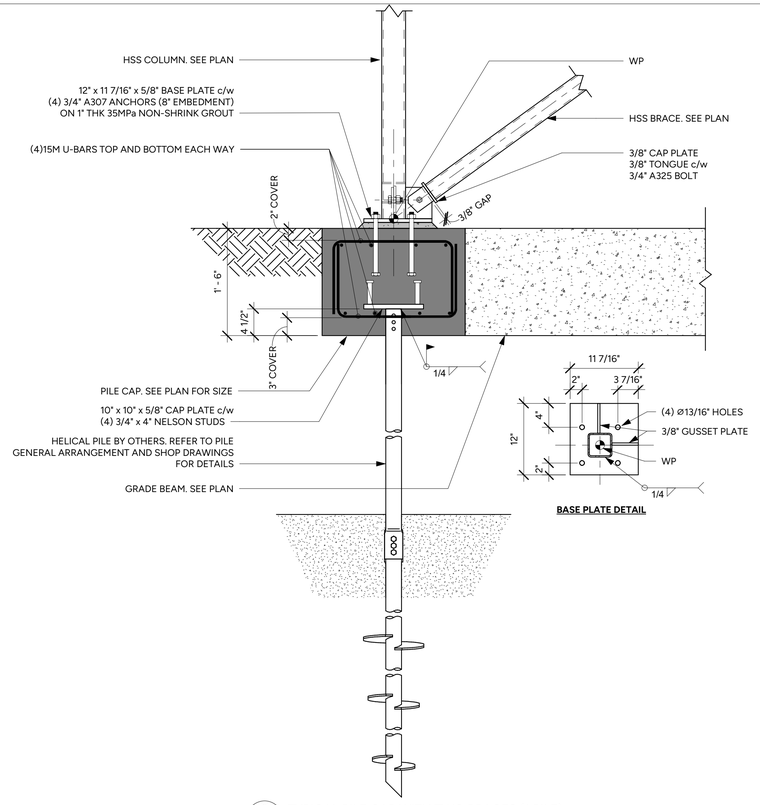

3 S2.1 TYPICAL PILE CAP WITH TWO BRACES (1 PILE)
1" = 1'-0"

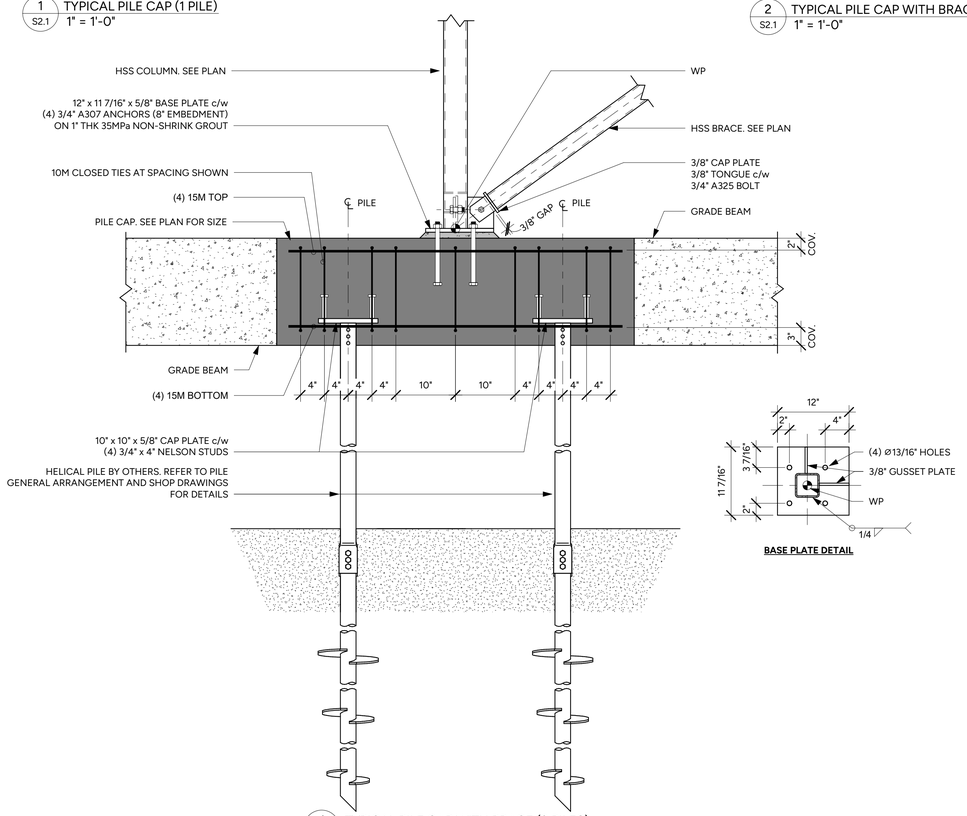

4 S2.1 TYPICAL PILE CAP WITH BRACE (2 PILES)
1" = 1'-0"

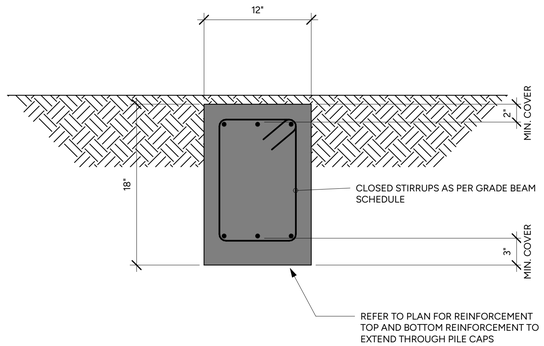

5 S2.1 TYPICAL GRADE BEAM SECTION
1 1/2" = 1'-0"

COPYRIGHT

INTELLECTUAL PROPERTY RIGHTS IN ANY INFORMATION OR DATA SUPPLIED WITHIN THIS DRAWING ARE OWNED BY OR LICENSED TO IKON ENGINEERS CANADA LTD. IT IS PROHIBITED TO COPY, REPRODUCE, STORE, PUBLISH OR COMMERCIALISE INFORMATION CONTAINED WITHIN THIS DRAWING WITHOUT PRIOR WRITTEN APPROVAL FROM IKON ENGINEERS CANADA LTD.
© 2025 IKON ENGINEERS CANADA LTD

NO.	Date	Description
3	10 Nov 2026	Issued For Construction
2	14 Oct 2026	Issued For Building Permit
1	18 Sep 2026	Issued For Coordination

REVISION

CONSULTANT

IKON ENGINEERS CANADA LTD.
9 - 1005 ALPHA LAKE ROAD,
WHISTLER B.C. V8E 0H5
T: +1 (604) 283-5208
E: hello@ikonengineers.com
FORMERLY TWIN PEAKS ENGINEERING LTD.

ENGINEERS & GEOSCIENTISTS
BRITISH COLUMBIA
PERMIT TO PRACTICE #:
1001438

SEAL

PROJECT TITLE

Davis Modular Brackendale

, Squamish, B.C.

SHEET TITLE

Concrete Details

JOB NO.: 26086 - SP

DWN: AB

SCALE: As indicated

DWG NO. **S3.1**

REV. 3

PUBLIC REFERENCE COPY / OWNER DETAILS REMOVED

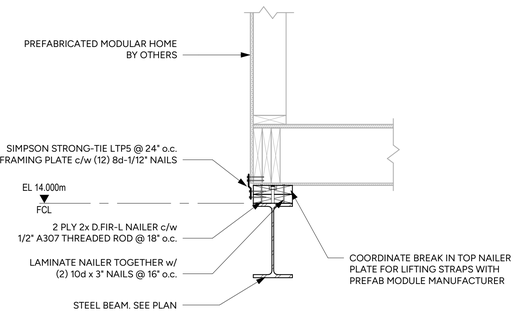

1 S2.1 TYPICAL MODULE CONNECTION TO STEEL BEAM GRID A AND C
1" = 1'-0"

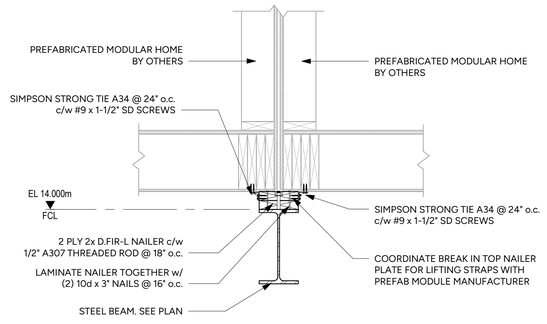

2 S2.1 TYPICAL MODULE CONNECTION TO STEEL BEAM GRID B
1" = 1'-0"

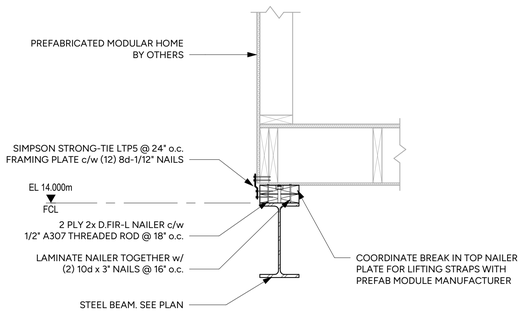

3 S2.1 TYPICAL MODULE CONNECTION TO STEEL BEAM GRID 1
1" = 1'-0"

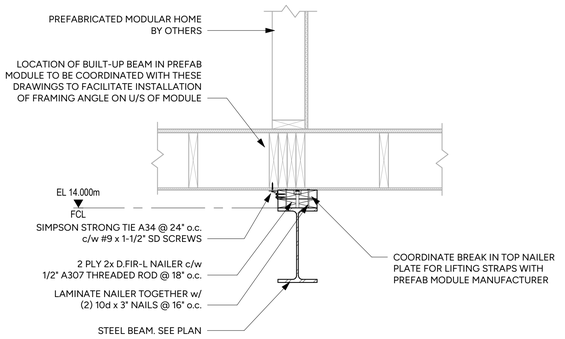

4 S2.1 TYPICAL MODULE CONNECTION TO STEEL BEAM GRID 2
1" = 1'-0"

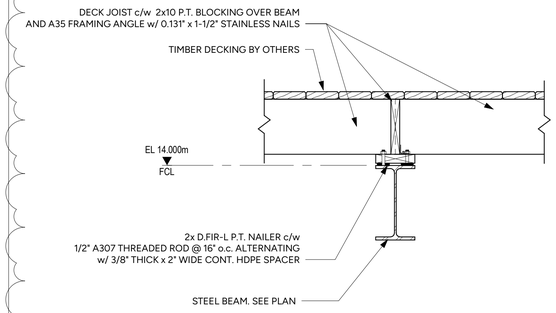

5 S2.1 TYP. JOIST TO STEEL BEAM CONNECTION
1" = 1'-0"

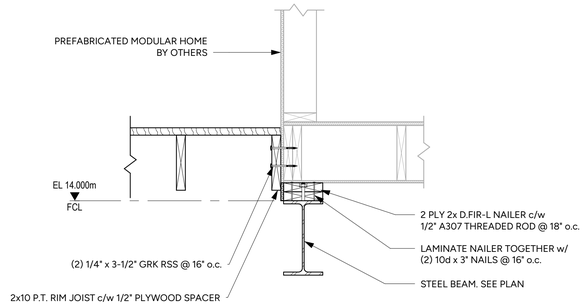

6 S2.1 TYPICAL MODULE CONNECTION TO STEEL BEAM GRID 3
1" = 1'-0"

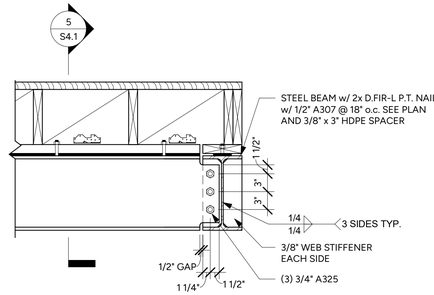

7 S2.1 STEEL SHEAR CONENCTION
1" = 1'-0"

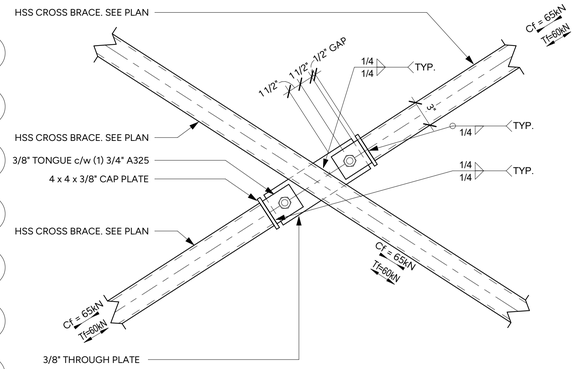

8 S2.1 CROSS BRACE INTERSECTION DETAIL
1 1/2" = 1'-0"

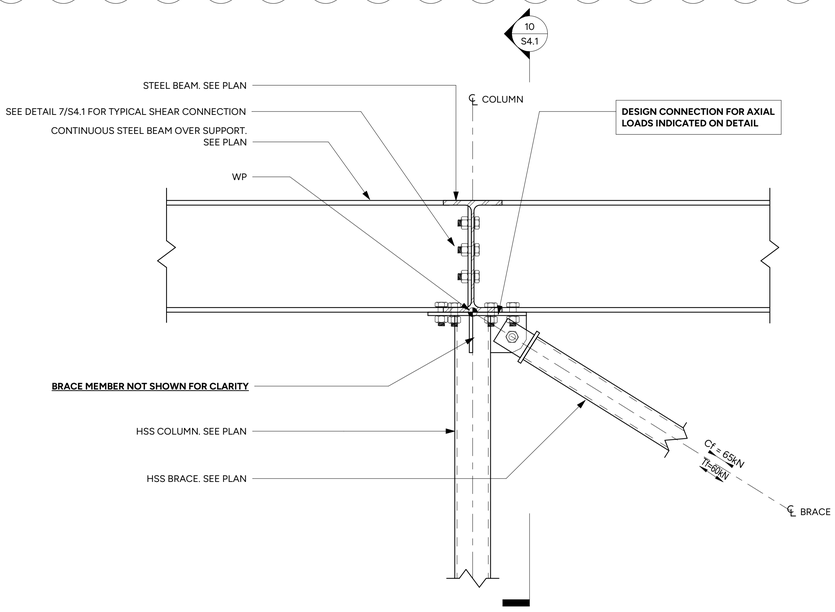

9 S2.1 BRACE CONNECTION AT BEAM
1 1/2" = 1'-0"

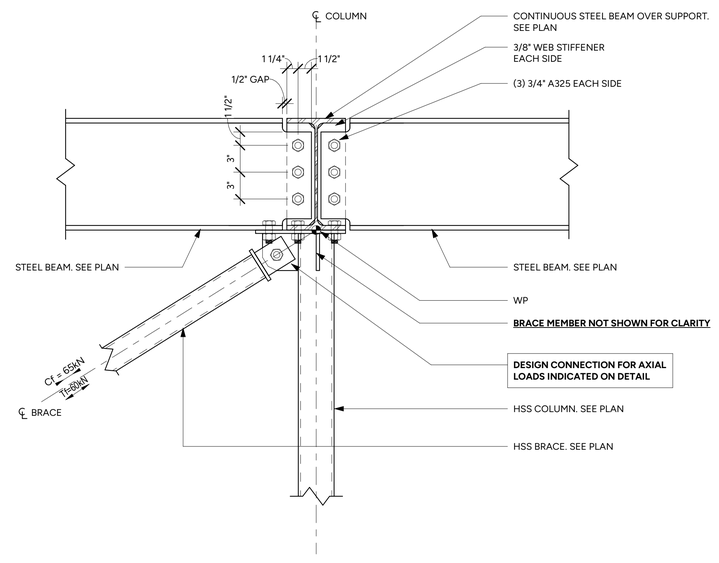

10 S2.1 BRACE CONNECTION
1 1/2" = 1'-0"

COPYRIGHT

INTELLECTUAL PROPERTY RIGHTS IN ANY INFORMATION OR DATA SUPPLIED WITHIN THIS DRAWING ARE OWNED BY OR LICENSED TO IKON ENGINEERS CANADA LTD. IT IS PROHIBITED TO COPY, REPRODUCE, STORE, PUBLISH OR COMMERCIALISE INFORMATION CONTAINED WITHIN THIS DRAWING WITHOUT PRIOR WRITTEN APPROVAL FROM IKON ENGINEERS CANADA LTD.
© 2025 IKON ENGINEERS CANADA LTD

NO.	Date	Description
3	10 Nov 2026	Issued For Construction
2	14 Oct 2026	Issued For Building Permit
1	18 Sep 2026	Issued For Coordination

REVISION

CONSULTANT

IKON ENGINEERS CANADA LTD.
9 - 1005 ALPHA LAKE ROAD,
WHISTLER B.C. V8E 0H5
T: +1 (604) 283-5208
E: hello@ikonengineers.com
FORMERLY TWIN PEAKS ENGINEERING LTD.

ENGINEERS & GEOSCIENTISTS
BRITISH COLUMBIA
PERMIT TO PRACTICE #:
1001438

SEAL

PROJECT TITLE

Davis Modular Brackendale

, Squamish, B.C.

SHEET TITLE

Framing Details

JOB NO.: 26086 - SP

DWN: AB

SCALE: As indicated

DWG NO. S4.1

REV. 3

PUBLIC REFERENCE COPY / OWNER DETAILS REMOVED